Workshop Manual

Polo 1995 ➤

Electrical system

Edition 12.2009

Protected by copyright. Copying for private or commercial purposes, in part or in whole, is not permitted unless authorised by Volkswagen AG. Volkswagen AG does not guarantee or accept any liability with respect to the correctness of information in this document. Copyright by Volkswagen AG.

satelettronica

List of Workshop Manual Repair Groups

Repair Group

27 - Starter, current supply, CCS
90 - Gauges, instruments
92 - Windscreen wash/wipe system
94 - Lights, bulbs, switches - exterior
96 - Lights, bulbs, switches - interior
97 - Wiring

Protected by copyright. Copying for private or commercial purposes, in part or in whole, is not permitted unless authorised by Volkswagen AG. Volkswagen AG does not guarantee or accept any liability with respect to the correctness of information in this document. Copyright by Volkswagen AG.

satelettronica

Technical information should always be available to the foremen and mechanics, because their careful and constant adherence to the instructions is essential to ensure vehicle road-worthiness and safety. In addition, the normal basic safety precautions for working on motor vehicles must, as a matter of course, be observed.

All rights reserved.
No reproduction without prior agreement from publisher.

Copyright © 2015 Volkswagen AG, Wolfsburg

D3E80273FF6

Contents

27 - Starter, current supply, CCS . . . 1

1 Battery . . . 1
1.1 Types of battery . . . 1
1.2 Warning notices and safety regulations . . . 1
1.3 Battery terminal connection . . . 1

2 Checking battery . . . 2

3 Charging battery . . . 3

4 Disconnecting and reconnecting battery . . . 4
4.1 Disconnecting and reconnecting battery . . . 4

5 Removing and installing battery . . . 7
5.1 Removing and installing battery . . . 7

6 Starter . . . 9
6.1 Removing and installing starter (petrol engine) . . . 9
6.2 Removing and installing starter (diesel engine) . . . 11

7 Removing and installing alternator with poly V-belt . . . 13
7.1 4-cylinder fuel injection engine with basic belt drive, vehicles ‣ 04.99 . . . 13
7.2 4-cylinder fuel injection engine with basic belt drive, vehicles 05.99 ‣ . . . 14
7.3 4-cylinder fuel injection engine with power assisted steering, vehicles ‣ 04.99 . . . 15
7.4 4-cylinder fuel injection engine with power assisted steering, vehicles 05.99 ‣ . . . 17
7.5 4-cylinder fuel injection engine with air conditioning compressor and power assisted steering, vehicles ‣ 04.99 . . . 18
7.6 4-cylinder fuel injection engine with air conditioning compressor and power assisted steering, vehicles 05.99 ‣ . . . 19
7.7 4-cylinder diesel engine, vehicles ‣ 04.99 . . . 20
7.8 4-cylinder diesel engine, vehicles 05.99 ‣ . . . 21
7.9 3-cylinder diesel engine . . . 22
7.10 Poly V-belt drives . . . 23
7.11 Checking V-belt . . . 24
7.12 Removing and installing poly V-belt . . . 25
7.13 Compact alternator with poly V-belt drive, vehicles ‣ 04.99 . . . 29
7.14 Checking carbon brushes for alternator, vehicles ‣ 04.99 . . . 30
7.15 Removing and installing voltage regulator for alternator, vehicles ‣ 04.99 . . . 30
7.16 Compact alternator with poly V-belt drive, vehicles 05.99 ‣ . . . 30
7.17 Checking carbon brushes for alternator, vehicles 05.99 ‣ . . . 31
7.18 Removing and installing voltage regulator for alternator, vehicles 05.99 ‣ . . . 32
7.19 Removing and installing poly V-belt pulley without freewheel . . . 32
7.20 Removing and installing poly V-belt pulley with freewheel . . . 33

90 - Gauges, instruments . . . 36

1 Dash panel insert for vehicles ‣ 1997 . . . 36
1.1 Removing and installing dash panel insert . . . 36
1.2 Renewing bulbs in dash panel insert (VDO) . . . 37
1.3 Renewing bulbs in dash panel insert (MOTOMETER) . . . 38
1.4 Dash panel insert (MOTOMETER) warning lamp symbols . . . 39
1.5 Pin assignment on dash panel insert . . . 40
1.6 Checking voltages and bulbs with test box V.A.G 1598 . . . 40

2 Dash panel insert for vehicles 1998 ‣ . . . 43
2.1 Renewing dash panel insert . . . 43
2.2 Removing and installing dash panel insert . . . 43
2.3 Dash panel insert, rear view . . . 45
2.4 Warning lamp symbols in dash panel insert . . . 47
2.5 Pin assignment of connectors on dash panel insert . . . 50

Protected by copyright. Copyright by Volkswagen AG. Volkswagen AG does not guarantee or accept any liability with respect to the correctness of information in this document. Copyright by Volkswagen AG. Reproduction or transmission of this document or any part thereof is not permitted without the express authorisation of Volkswagen AG.
satelettronica

3 Dash panel insert for vehicles 10.99 ▸ . . . 52
3.1 Renewing dash panel insert . . . 52
3.2 Removing and installing dash panel insert . . . 52
3.3 Rear view of panel insert for vehicles 10.99 ▸ . . . 53
3.4 Warning lamp symbols in dash panel insert . . . 54
3.5 Description of instruments . . . 57
3.6 Pin assignment of connectors on dash panel insert . . . 59
4 Service interval display . . . 61
4.1 Resetting service interval display . . . 61

92 - Windscreen wash/wipe system . . . 62
1 Windscreen wiper system . . . 62
1.1 Removing and installing windscreen wiper system, vehicles ▸ 09.99 . . . 62
1.2 Removing and installing window wiper system, vehicles 10.99 ▸ . . . 63
1.3 Removing and installing wiper rubber . . . 68
2 Window washer system . . . 70
2.1 Assembly overview of window washer system, vehicles ▸ 09.99 . . . 70
2.2 Assembly overview of window washer system, vehicles 10.99 ▸ . . . 71
2.3 Adjusting windscreen washer system spray jets . . . 71
2.4 Renewing windscreen washer system spray jets, vehicles 10.99 ▸ . . . 73
2.5 Removing washer fluid reservoir, vehicles 10.99 ▸ . . . 73
3 Rear window wipe/wash system . . . 74
3.1 Rear window wipe/wash system, vehicles ▸ 09.99 . . . 74
3.2 Rear window wipe/wash system, vehicles 10.99 ▸ . . . 76
4 Headlight washer system . . . 79
4.1 Assembly overview of headlight washer system, vehicles ▸ 09.99 . . . 79
4.2 Assembly overview of headlight washer system, vehicles 10.99 ▸ . . . 80

94 - Lights, bulbs, switches - exterior . . . 83
1 Headlights, vehicles ▸ 09.99 . . . 83
1.1 Assembly overview of headlights, vehicles ▸ 09.99 . . . 83
1.2 Removing and installing headlight, vehicles ▸ 09.99 . . . 84
1.3 Renewing headlight bulbs, vehicles ▸ 09.99 . . . 84
1.4 Removing and installing headlight range control motor . . . 85
1.5 Adjusting headlights, vehicles ▸ 09.99 . . . 86
2 Headlights, vehicles 10.99 ▸ . . . 87
2.1 Assembly overview of headlights, vehicles 10.99 ▸ . . . 87
2.2 Removing and installing headlight, vehicles 10.99 ▸ . . . 88
2.3 Renewing headlight bulbs, vehicles 10.99 ▸ . . . 88
2.4 Removing and installing headlight range control motor, vehicles 10.99 ▸ . . . 91
2.5 Repairing retaining tabs on headlight . . . 92
2.6 Headlight conversion for driving on left/right . . . 94
2.7 Adjusting headlights, vehicles 10.99 ▸ . . . 97
3 Headlights with gas discharge bulbs . . . 98
3.1 Assembly overview of headlights with gas discharge bulbs . . . 98
3.2 Removing and installing headlight . . . 99
3.3 Renewing gas discharge headlight bulb . . . 99
3.4 Removing and installing headlight range control motor for headlights with gas discharge bulb . . . 104
3.5 Removing and installing gas discharge bulb control unit . . . 105
3.6 Repairing retaining tabs on headlight . . . 106
3.7 Adjusting headlights . . . 108
4 Fog lights . . . 109
4.1 Removing and installing fog lights, vehicles ▸ 09.99 . . . 109
4.2 Removing and installing fog lights, vehicles 10.99 ▸ . . . 109

satelettronica

4.3 Removing and installing fog light bulb, vehicles ‣ 09.99 . . . 110
4.4 Removing and installing fog light bulb, vehicles 10.99 ‣ . . . 111

5 Front turn signals . . . 113
5.1 Removing and installing front turn signals, vehicles ‣ 09.99 . . . 113
5.2 Removing and installing front turn signals, vehicles 10.99 ‣ . . . 113
5.3 Renewing turn signal bulb, vehicles ‣ 09.99 . . . 115
5.4 Renewing turn light signal bulb, vehicles 10.99 ‣ . . . 115

6 Turn signal repeater . . . 116
6.1 Removing and installing turn signal repeater . . . 116

7 Tail lights . . . 117
7.1 Assembly overview of tail light, vehicles ‣ 09.99 . . . 117
7.2 Removing and installing tail light, vehicles ‣ 09.99 . . . 118
7.3 Removing and installing bulb carrier for tail light, vehicles ‣ 09.99 . . . 118
7.4 Assembly overview of tail light, vehicles 10.99 ‣ . . . 119
7.5 Removing and installing tail light, vehicles 10.99 ‣ . . . 119
7.6 Removing and installing bulb carrier for tail light, vehicles 10.99 ‣ . . . 120

8 Number plate light . . . 121
8.1 Removing and installing number plate light, vehicles ‣ 09.99 . . . 121
8.2 Removing and installing number plate light, vehicles 10.99 ‣ . . . 121

9 Additional brake light . . . 123
9.1 Assembly overview, vehicles ‣ 09.99 . . . 123
9.2 Removing and installing additional brake light, vehicles ‣ 09.99 . . . 123
9.3 Removing and installing additional brake light, vehicles 10.99 ‣ . . . 124
9.4 Removing and installing additional brake light, Polo GTI 10.99 ‣ . . . 126

10 Steering column switch and ignition/starter switch . . . 127
10.1 Assembly overview of steering column, vehicles ‣ 09.99 . . . 127
10.2 Assembly overview of steering column, vehicles 10.99 ‣ . . . 129
10.3 Removing and installing steering column switch, vehicles ‣ 09.99 . . . 131
10.4 Removing and installing steering column switch, vehicles 10.99 ‣ . . . 132
10.5 Removing and installing steering lock housing, vehicles ‣ 09.99 . . . 134
10.6 Removing and installing steering lock housing, vehicles 10.99 ‣ . . . 136
10.7 Lock cylinder, vehicles ‣ 09.99 . . . 138
10.8 Lock cylinder, vehicles 10.99 ‣ . . . 139
10.9 Removing and installing ignition/starter switch . . . 140
10.10 Pin assignment for ignition switch . . . 141

96 - Lights, bulbs, switches - interior . . . 142

1 Immobilizer . . . 142
1.1 Assembly overview of immobilizer, vehicles ‣ 09.99 . . . 142
1.2 Removing and installing immobilizer control unit, vehicles ‣ 09.99 . . . 142
1.3 Removing and installing immobilizer reader coil D2 , vehicles ‣ 09.99 . . . 143
1.4 Assembly overview of immobilizer, vehicles 10.99 ‣ . . . 143
1.5 Removing and installing immobilizer control unit, vehicles 10.99 ‣ . . . 144
1.6 Removing and installing immobilizer reader coil D2 , vehicles 10.99 ‣ . . . 145
1.7 Transponder . . . 145

2 Interior lights and switches . . . 146
2.1 Removing and installing switches in dash panel, vehicles ‣ 09.99 . . . 146
2.2 Removing and installing switches in dash panel, vehicles 10.99 ‣ . . . 147
2.3 Removing and installing light switch, vehicles ‣ 09.99 . . . 147
2.4 Removing and installing light switch, vehicles 10.99 ‣ . . . 148
2.5 Removing and installing headlight range control regulator E102 with switches and instruments illumination regulator E20 , vehicles 10.99 ‣ . . . 149
2.6 Removing and installing switches in centre of dash panel, vehicles ‣ 09.99 . . . 149
2.7 Removing and installing switches in centre of dash panel, vehicles 10.99 ‣ . . . 150
2.8 Removing and installing hazard warning light switch E3 , vehicles 10.99 ‣ . . . 150

Protected by copyright. Copyright by Volkswagen AG. Volkswagen AG does not guarantee or accept any liability with respect to the correctness of information in this document. Copying for private or commercial purposes, in part or in whole, is not permitted unless authorised by Volkswagen AG.
satelettronica

2.9 Removing and installing interior light, vehicles 10.99 ▸ 151
2.10 Removing and installing sliding sunroof adjustment regulator E139 , vehicles 10.99 ▸ 151
2.11 Removing and installing window regulator switches, vehicles 10.99 ▸ 152
2.12 Removing and installing mirror adjustment switch E43 with mirror adjustment change-over switch E48 , vehicles 10.99 ▸ 153
2.13 Removing and installing door contact switch, vehicles 10.99 ▸ 153

97 - Wiring 155

1 Removing and installing relay carrier, coupling station and fuse holder 155
1.1 Removing and installing relay plate, vehicles ▸ 1997 155
1.2 Removing and installing multi-pin connector on back of relay plate, vehicle ▸ 1997 155
1.3 Removing and installing fuse holder and relay carrier, vehicles 1998 ▸ 09.99 156
1.4 Removing and installing relay carrier in front left footwell, vehicles 1998 ▸ 09.99 156
1.5 Removing and installing fuse holder in front left footwell, vehicles 1998 ▸ 09.99 157
1.6 Removing and installing relay carrier, vehicles 10.99 ▸ 157
1.7 Removing and installing coupling station below relay carrier, vehicles 10.99 ▸ 160
1.8 Removing and installing fuse holder in front left footwell, vehicles 10.99 ▸ 161
2 Wiring harness and connector repairs 163

Protected by copyright. Copying for private or commercial purposes, in part or in whole, is not permitted unless authorised by Volkswagen AG. Volkswagen AG does not guarantee or accept any liability with respect to the correctness of information in this document. Copyright by Volkswagen AG.

satelettronica

27 – Starter, current supply, CCS

1 Battery

1.1 Types of battery

All the instructions and information for this chapter can be found in the workshop manual “Electrical System, General Information”. A link to this workshop manual is not possible at present for technical reasons. Please select the workshop manual “Electrical System, General Information” manually in ELSA.

1.2 Warning notices and safety regulations

All the instructions and information for this chapter can be found in the workshop manual “Electrical System, General Information”. A link to this workshop manual is not possible at present for technical reasons. Please select the workshop manual “Electrical System, General Information” manually in ELSA.

1.3 Battery terminal connection

All the instructions and information for this chapter can be found in the workshop manual “Electrical System, General Information”. A link to this workshop manual is not possible at present for technical reasons. Please select the workshop manual “Electrical System, General Information” manually in ELSA.

Protected by copyright. Copying for private or commercial purposes, in part or in whole, is not permitted unless authorised by Volkswagen AG. Volkswagen AG does not guarantee or accept any liability with respect to the correctness of information in this document. Copyright by Volkswagen AG.
satelettronica

2 Checking battery

All the instructions and information for this chapter can be found in the workshop manual “Electrical System, General Information”. A link to this workshop manual is not possible at present for technical reasons. Please select the workshop manual “Electrical System, General Information” manually in ELSA.

Protected by copyright. Copying for private or commercial purposes, in part or in whole, is not permitted unless authorised by Volkswagen AG. Volkswagen AG does not guarantee or accept any liability with respect to the correctness of information in this document. Copyright by Volkswagen AG.
satelettronica

3 Charging battery

All the instructions and information for this chapter can be found in the workshop manual “Electrical System, General Information”. A link to this workshop manual is not possible at present for technical reasons. Please select the workshop manual “Electrical System, General Information” manually in ELSA.

Protected by copyright. Copying for private or commercial purposes, in part or in whole, is not permitted unless authorised by Volkswagen AG. Volkswagen AG does not guarantee or accept any liability with respect to the correctness of information in this document. Copyright by Volkswagen AG.

satelettronica

4 Disconnecting and reconnecting battery

4.1 Disconnecting and reconnecting battery

Note

Disconnecting the battery earth strap (open circuit) provides a safe working environment for repairs to the electrical system. The battery positive wire need only be disconnected for removal of the battery. However, observe the notes on disconnecting the battery in any case.

Special tools and workshop equipment required

- Torque wrench -V.A.G 1331-

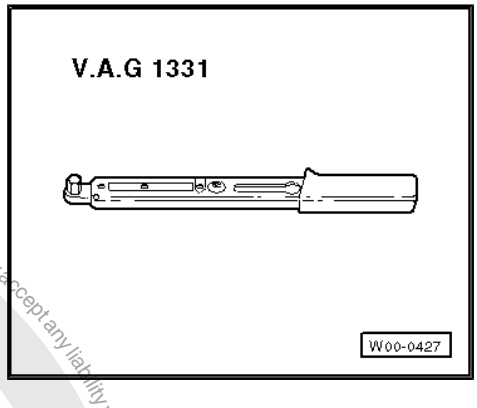

Disconnecting battery

– Switch off ignition and all electrical consumers and remove ignition key.

– Disconnect battery earth strap on battery negative terminal first.

Note

To disconnect the battery positive wire, first remove the fuse holder on the battery.

Removing fuse holder on battery:

– Press locking lugs -arrows- together to open fuse holder and take off cover.

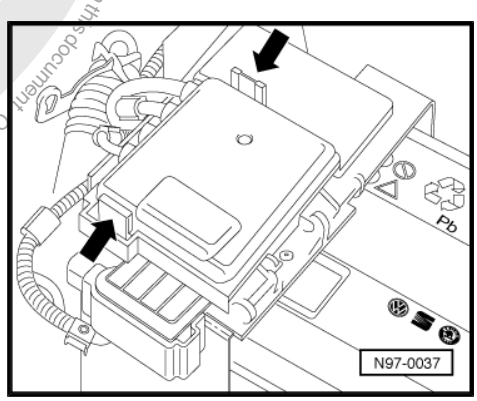

Protected by copyright. Copying for private or commercial purposes, in part or in whole, is not permitted unless authorised by Volkswagen AG. Volkswagen AG does not guarantee or accept any liability with respect to the correctness of information in this document. Copyright by Volkswagen AG.
satelettronica

– Unscrew securing nut -1- and current conductor plate on positive battery clamp.

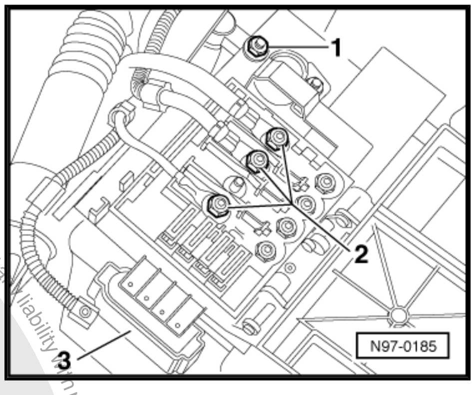

– Remove securing nuts -2- to disconnect wiring to strip fuses.

– Disconnect connector -3-.

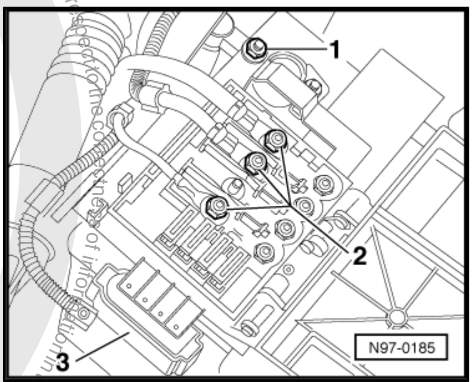

– Release tension on fuse holder spring catch by pressing down with a thumb and lever spring catch locking device off battery using a suitable screwdriver.

– Remove fuse holder upwards off battery.

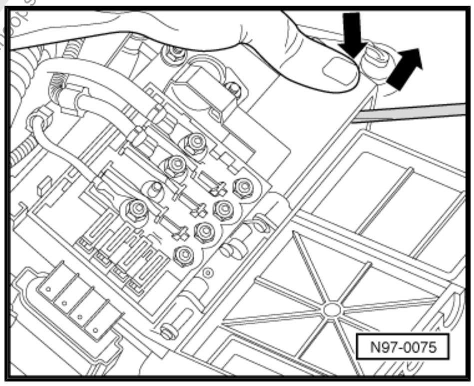

– Then release the battery positive terminal clamp securing bolt -arrow-.

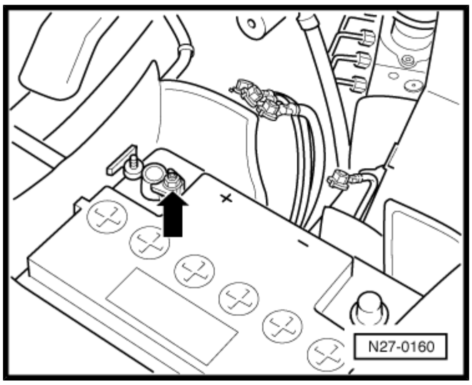

Connecting battery:

Note

♦ *Battery terminal clamps must be fitted only by hand without force to prevent damage to battery housing.*

♦ *Battery terminals must not be greased.*

– Fit positive cable clamp onto battery positive terminal.

Protected by copyright. Copying for private or commercial purposes, in part or in whole, is not permitted unless authorised by Volkswagen AG. Volkswagen AG does not guarantee or accept any liability with respect to the correctness of information in this document. Copyright by Volkswagen AG.

satelettronica

– Tighten battery positive terminal clamp securing bolt -arrow- to 6 Nm.

Installing fuse holder on battery:

– Fit fuse holder onto battery, when doing this fit current conductor plate onto retaining pins on battery positive terminal.

– Engage fuse holder spring catch in battery.

– Tighten securing bolt to 6 Nm.

– Close heat insulation jacket if necessary.

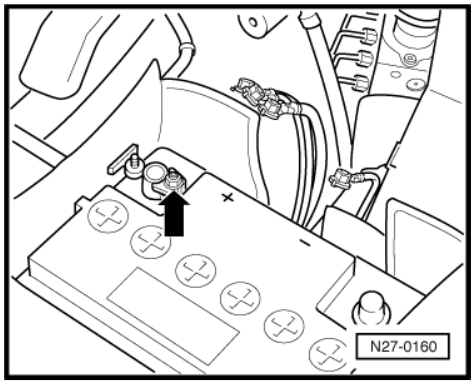

– Tighten securing nuts -1- and secure current conductor plate on positive terminal clamp to 6 Nm.

– If wiring was disconnected, reconnect again to strip fuses and then tighten securing bolts -2- to 6 Nm.

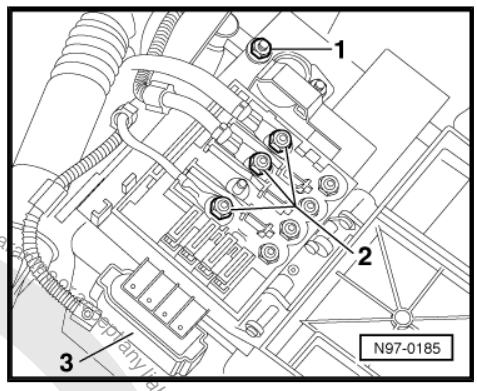

Note

See pin assignment in appropriate current flow diagram! ⇒ Current flow diagrams, Electrical fault finding and Fitting locations

– Reconnect connector -3-.

– Fit fuse holder cover and close.

– Reconnect negative terminal clamp to battery negative terminal and tighten to 6 Nm.

– Perform steps according to table ⇒ page 6 .

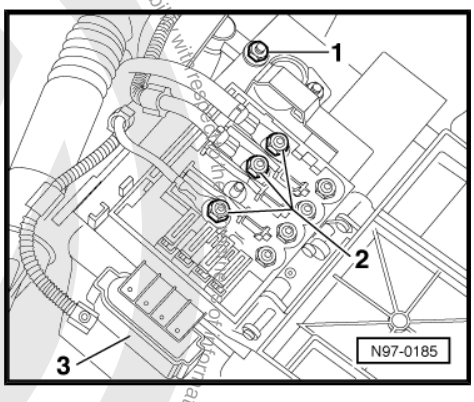

4.1.1 Steps after connecting battery

Procedures after reconnecting battery:

Procedure	Performed
Ignition with ignition key: switch on ignition and then switch off again.	
Read fault memory: ⇒ Guided fault finding using VAS 5051A .	
Clock : Check settings and adjust if necessary.	
Window regulators: fully open all windows and close again, actuate switch again in “Close” position and hold until control unit switches.	
Functional check: check all electrical consumers.	

Table can be printed out if necessary.

Protected by copyright. Copying for private or commercial purposes, in part or in whole, is not permitted unless authorised by Volkswagen AG. Volkswagen AG does not guarantee the accuracy of any data, with respect to the information in this document. Copyright by Volkswagen AG.
satelettronica

5 Removing and installing battery

5.1 Removing and installing battery

Special tools and workshop equipment required

- Torque wrench -V.A.G 1331-

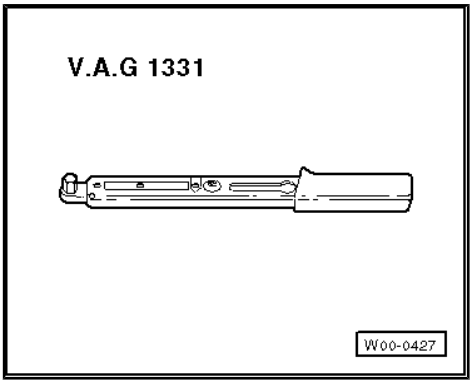

Removing battery

– Disconnect battery ⇒ page 4 .

– The battery heat insulation jacket -arrow- can be opened and removed (if fitted) once the battery positive clamp has been loosened and removed from the battery positive terminal.

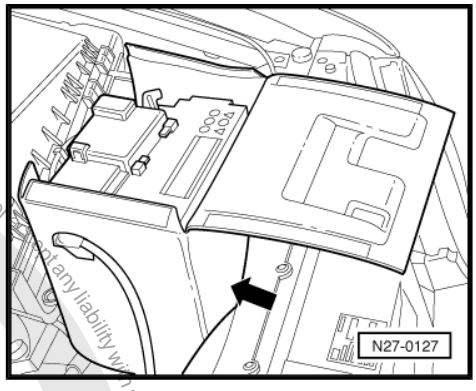

– Remove hexagon bolt M8×25 -arrow-.

– Remove battery securing bracket.

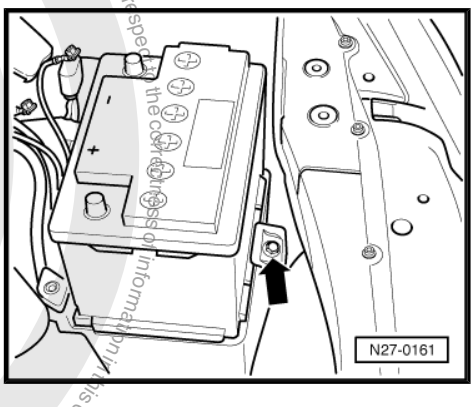

Installing battery

To guarantee the battery seats securely, only install batteries with a 10.5 mm battery foot strip and adhere to the following procedures:

Protected by copyright. Copying for private or commercial purposes, in part or in whole, is not permitted unless authorised by Volkswagen AG. Volkswagen AG does not guarantee or assume any liability with respect to the correctness of information in this document. Copyright by Volkswagen AG.
satelettronica

– Install battery so that the lug of the battery carrier -arrow- engages in the battery base strip recess -1-.

It must not be possible to move a battery to the left or to the right.

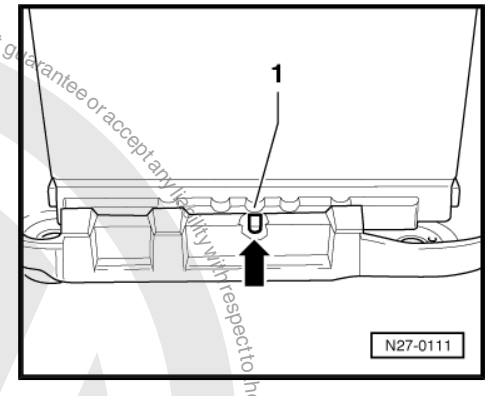

The battery is inserted correctly when the centre recess in the battery foot strip aligns with threaded hole in the battery carrier -arrows-.

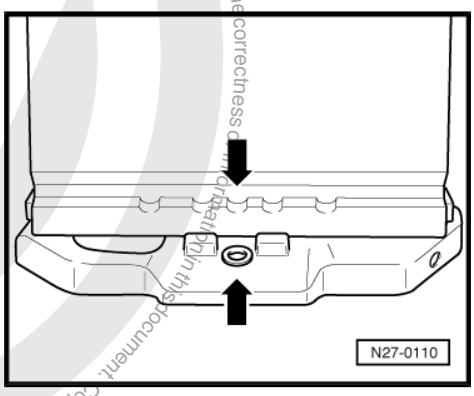

– On batteries with a hose for central venting ensure that the hose is not pinched. Only then can the battery vent freely.

– Ensure that the opening on the upper side of the battery cover is not blocked on batteries without a hose for central venting.

– Install retaining bracket and tighten M8×25 securing bolt -arrow- to 22 Nm.

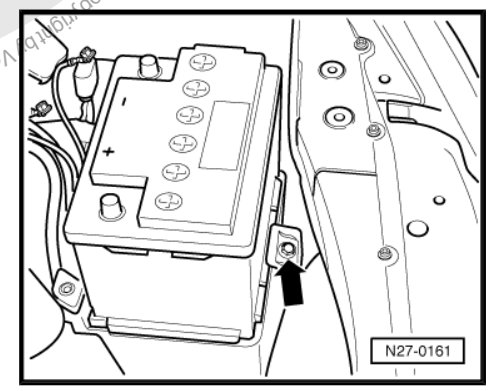

– Reinstall heat insulation jacket, if necessary.

– After installing, check that battery is seated securely. A loosely fitted battery creates the following dangers:

♦ Shortened service life due to damage from vibration (danger of explosion)

♦ The plates in the battery cells will be damaged if the battery is not secured correctly.

♦ Damage to battery housing by securing bracket (possibility of acid leaking, with high consequential costs)

♦ Poor crash safety

– Connecting battery ⇒ page 4 .

Volkswagen AG. Volkswagen AG does not guarantee or accept any liability with respect to the correctness of information in this document. Copyright by Volkswagen AG. Protected by copyright. Copying for private or commercial purposes, in part or in whole, is not permitted unless authorised by Volkswagen AG.
satelettronica

6 Starter

Note

- *If the vehicle has a radio with anti-theft coding, obtain code before disconnecting battery.*
- *To disconnect and reconnect the battery, the procedure described in the workshop manual should be strictly adhered to* *⇒ page 4* *.*
- *Notes concerning the removal and installation of the starter bush can be found in ⇒ Rep. Gr. 34 , ⇒ Rep. Gr. 37 .*

6.1 Removing and installing starter (petrol engine)

Special tools and workshop equipment required

- Torque wrench -V.A.G 1331-

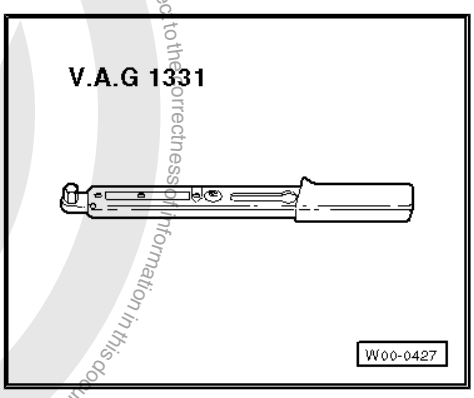

- Torque wrench -V.A.G 1332-

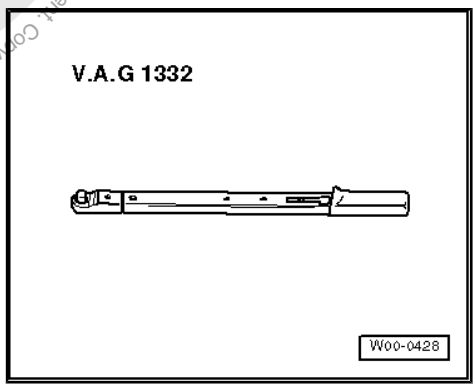

Removing:

– Disconnect earth strap at battery.

Protected by copyright. Copying for private or commercial purposes, in part or in whole, is not permitted unless authorised by Volkswagen AG. Volkswagen AG does not guarantee or accept any liability with respect to the correctness of information in this document. Copyright by Volkswagen AG.
satelettronica

– Unclip line -1- from bracket -2-.
– Unscrew hexagon bolt -3- and remove bracket -2-.

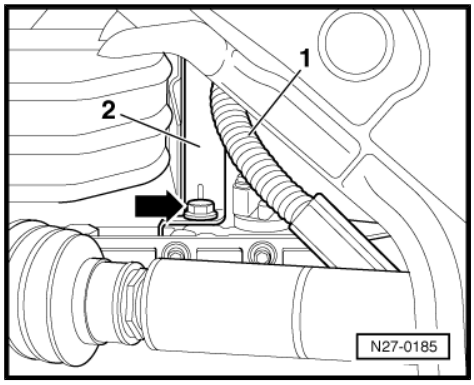

– Release terminal 50 connector -1- and pull disconnect.
– Remove plastic cap -2- and disconnect wire from solenoid switch terminal 30.

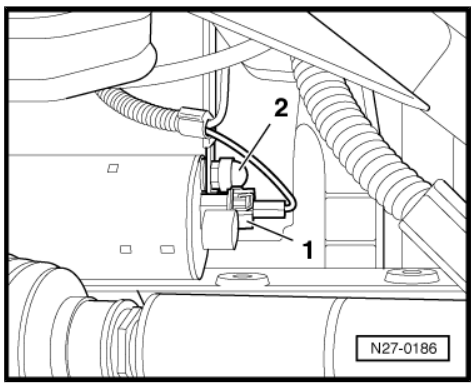

– Remove hexagon bolt -1-.
– Remove hexagon nut -4-.

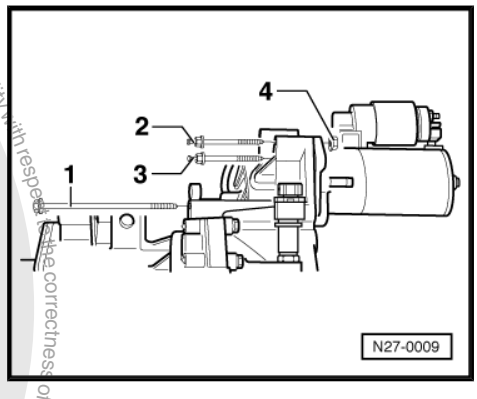

Note

On some vehicles the bolts -2- and -3- are secured with a clip.

– Unscrew hexagon bolt -3- and remove bolt -2-.
– Take starter out downwards.

Installing:

– Insert starter.

Insert hexagon bolts -1- and -3- and tighten hand-tight.
– Insert hexagon bolt -2- and tighten hexagon nut -4- hand-tight.
– Tighten hexagon bolts -1- and -3- and hexagon nut -4-.

Specified torques ⇒ Rep. Gr. 34 ; Removing and installing engine

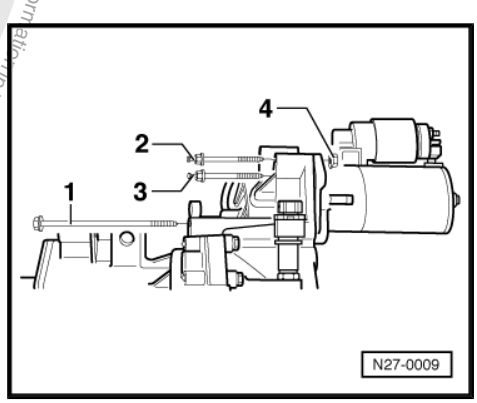

Note

If necessary, secure bolts -2- and -3- with a clip.

Copyright by Volkswagen AG. Protected by copyright. Copyright is valid for commercial purposes, in part or in whole, not permitted unless authorised by Volkswagen AG. Volkswagen AG does not guarantee or accept any liability with respect to the correctness of information in this document.

satelettronica

– Reconnect terminal 50 connector -1-.
– Tighten wire terminal from solenoid switch (terminal 30) to 13 Nm and fit plastic cap -2-.

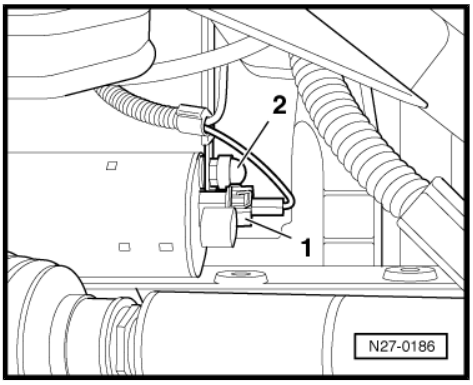

– Install bracket -2- and tighten hexagon bolt -arrow-.
– Clip line -1- into bracket -2-.

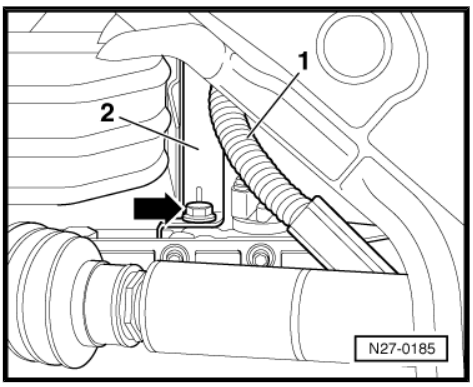

6.2 Removing and installing starter (diesel engine)

Special tools and workshop equipment required

♦ Torque wrench -V.A.G 1331-

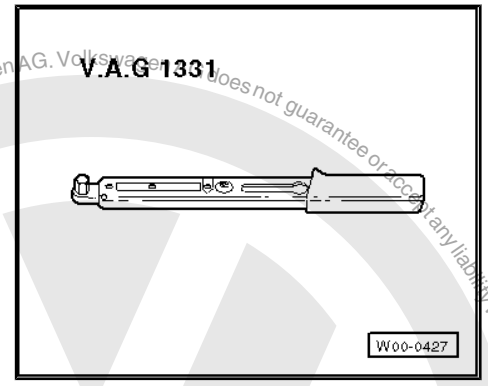

♦ Torque wrench -V.A.G 1332-

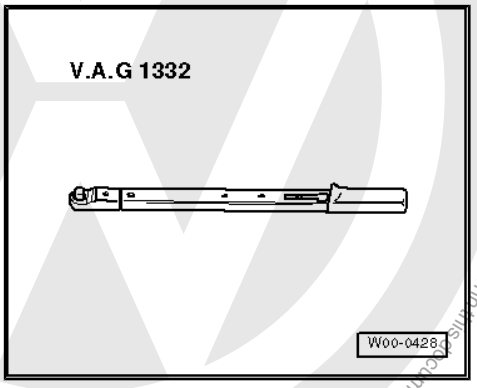

Removing:

– Disconnect earth strap at battery.

satelettronica
Protected by copyright. Copying for private or commercial purposes, in part or in whole, is not permitted unless authorised by Volkswagen AG. Volkswagen AG does not guarantee or accept any liability with respect to the correctness of information in this document. Copyright by Volkswagen AG.

Protected by copyright. Copying for private or commercial purposes, in part or in whole, is not permitted unless authorised by Volkswagen AG. Volkswagen AG does not guarantee or accept any liability with respect to the correctness of information in this document. Copyright by Volkswagen AG.

Note

On vehicles with 3-cylinder diesel engine, it may be necessary to remove the vibration damper of selector mechanism in order to remove the starter. On these vehicles, the cable duct must also be unclipped and laid aside.

– Release terminal 50 connector -1- and pull disconnect.

– Remove plastic cap -2- and disconnect wire from solenoid switch terminal 30.

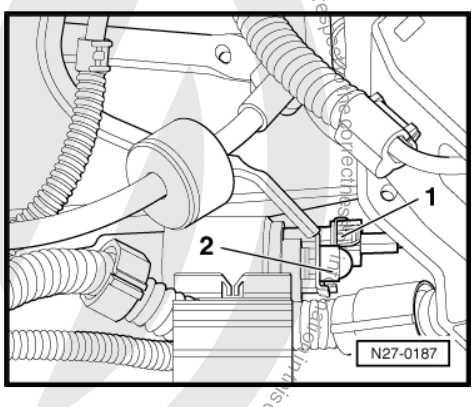

– Remove retainer -1- for coolant hose.

– Remove studs -arrows-.

– Take starter out upwards.

Installing:

– Insert starter.

– Tighten studs -arrows-.

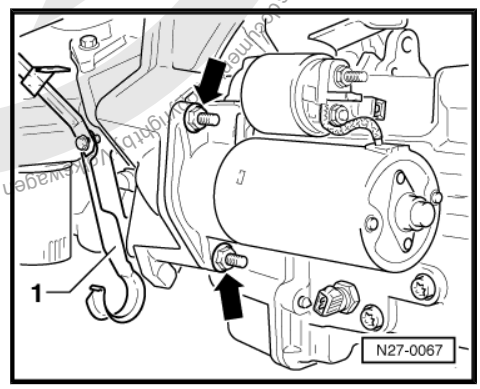

Specified torques ⇒ Rep. Gr. 34 ; Removing and installing engine

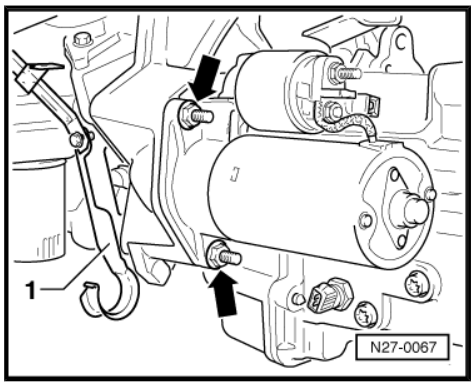

– Reconnect terminal 50 connector -1-.

– Tighten wire terminal on solenoid switch (terminal 30) to 13 Nm and fit plastic cap -2-.

– If necessary, install vibration damper of selector mechanism and clip in cable duct.

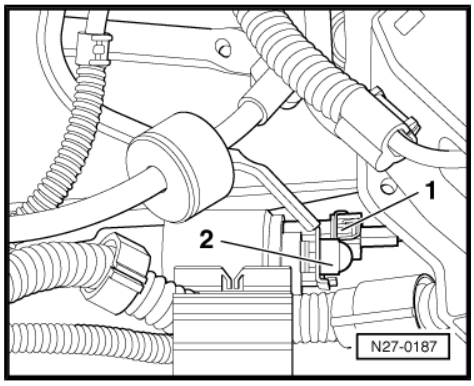

satelettronica

7 Removing and installing alternator with poly V-belt

Note

- *To disconnect and reconnect the battery, the procedure described in the workshop manual should be strictly adhered to* ⇒ page 4 .
- *If the vehicle has a radio with anti-theft coding, obtain code before disconnecting battery.*
- *When the battery is reconnected, check the vehicle equipment (radio, clock, window regulators) as per Workshop Manual and/or the Owner's Manual.*
- *Checking alternator ⇒ Current flow diagrams, Electrical fault finding and Fitting locations.*

7.1 4-cylinder fuel injection engine with basic belt drive, vehicles ▸ 04.99

1 - Hexagon bolts
- ❑ 55 Nm
- ❑ With aluminium block: M10×55 mm, renew bolts (coated with sealant)
- ❑ With cast iron block: M10×50 mm

2 - Hexagon bolts
- ❑ M3×18mm

3 - Protective cap

4 - Cross-head screws
- ❑ M4×25 mm

5 - Voltage regulator
- ❑ Checking carbon brushes ⇒ page 30
- ❑ Removing and installing ⇒ page 30

6 - Alternator
- ❑ Prescribed torque for battery positive wire ⇒ page 29

7 - Poly V-belt
- ❑ Removing and installing ⇒ page 25
- ❑ Poly V-belt drive ⇒ page 23

8 - Tensioning arm
- ❑ Observe tightening se-

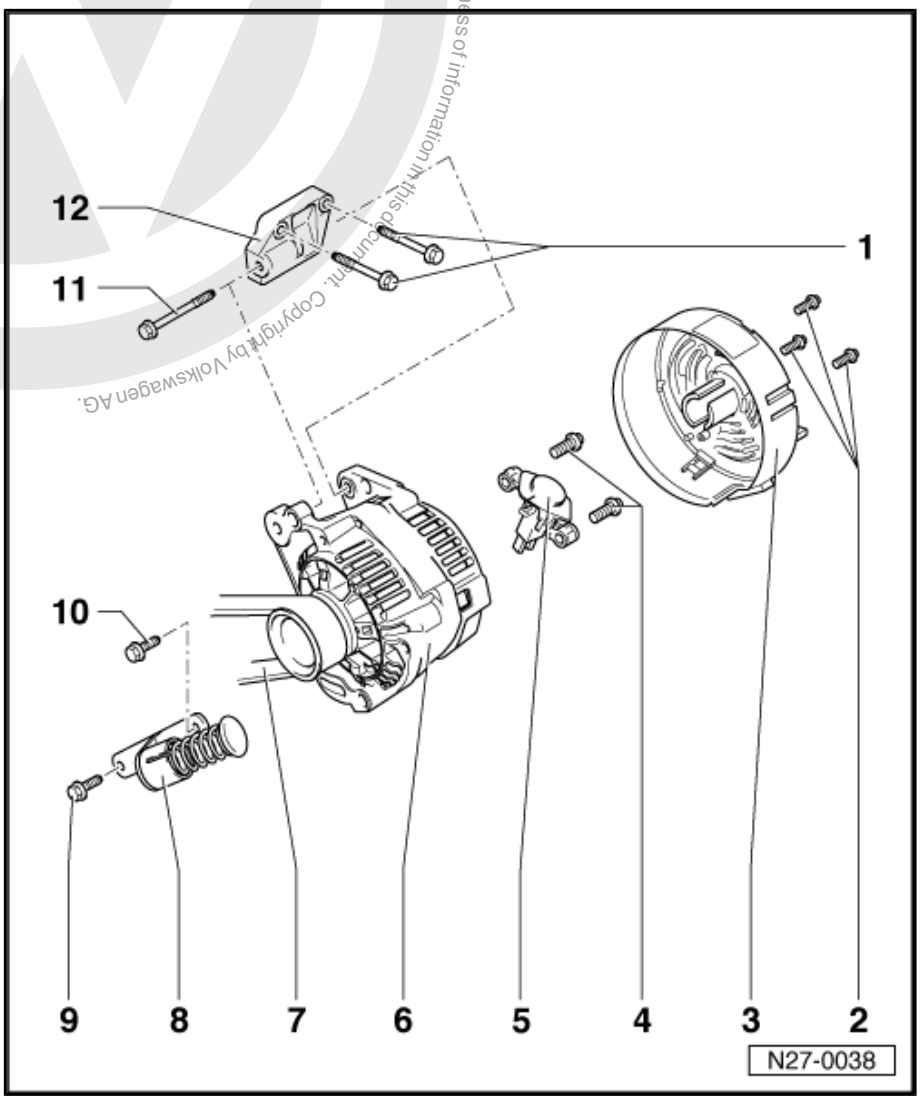

Protected by copyright. Copying for private or commercial purposes, in part or in whole, is not permitted unless authorised by Volkswagen AG. Volkswagen AG does not guarantee or accept any liability with respect to the correctness of information in this document. Copyright by Volkswagen AG.
satelettronica

quence ⇒ page 25

9 - Hexagon bolt
- ❑ 25 Nm
- ❑ With aluminium block: M8×25 mm, renew bolts (coated with sealant)
- ❑ With cast iron block: M8×22 mm

10 - Hexagon bolt
- ❑ M8×35 mm
- ❑ 25 Nm

11 - Hexagon bolt
- ❑ M8×85 mm
- ❑ 25 Nm
- ❑ Observe tightening sequence ⇒ page 25

12 - Bracket

7.2 4-cylinder fuel injection engine with basic belt drive, vehicles 05.99 ▸

1 - Hexagon bolts
- ❑ M10×50 mm
- ❑ 45 Nm
- ❑ With aluminium block: renew bolts (coated with sealant)

2 - Cross-head screw

3 - Protective cap

4 - Hexagon nut
- ❑ M8

5 - Hexagon nut
- ❑ M8

6 - Cross-head screws

7 - Voltage regulator
- ❑ Checking carbon brushes ⇒ page 31
- ❑ Removing and installing ⇒ page 32

8 - Alternator
- ❑ Prescribed torque for battery positive wire ⇒ page 30

9 - Poly V-belt
- ❑ Removing and installing ⇒ page 25
- ❑ Poly V-belt drive ⇒ page 23

10 - Tensioning arm
- ❑ Observe tightening se-

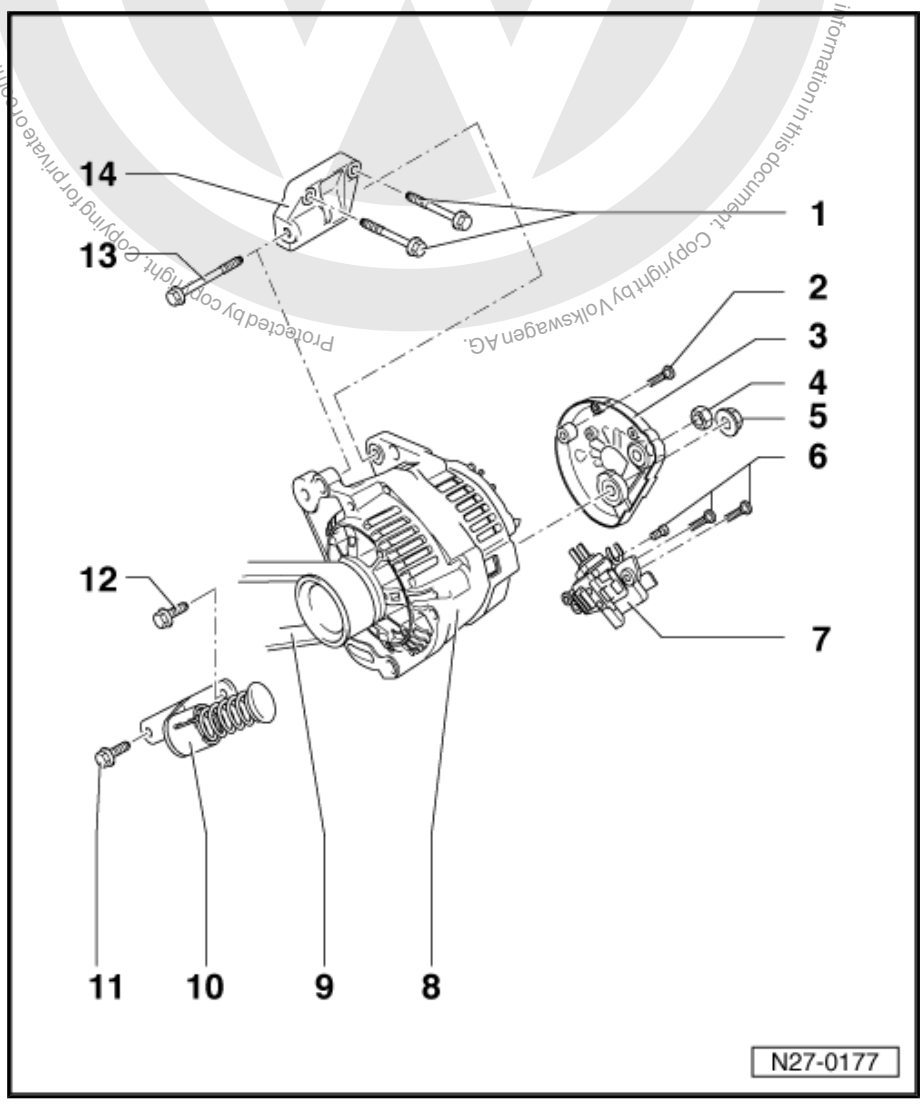

Protected by copyright. Copying for private or commercial purposes, in part or in whole, is not permitted unless authorised by Volkswagen AG. Volkswagen AG does not guarantee or accept any liability with respect to the correctness of information in this document. Copyright by Volkswagen AG.
satelettronica

quence ⇒ page 25

11 - Hexagon bolt

- ❑ M8×22 mm
- ❑ 25 Nm
- ❑ With aluminium block: renew bolt (coated with sealant)

12 - Hexagon bolt

- ❑ M8×39 mm
- ❑ 25 Nm

13 - Hexagon bolt

- ❑ M8×85 mm
- ❑ 25 Nm
- ❑ Observe tightening sequence ⇒ page 25

14 - Bracket

Protected by copyright. Copying for private or commercial purposes, in part or in whole, is not permitted unless authorised by Volkswagen AG. Volkswagen AG does not guarantee or accept any liability with respect to the correctness of information. Copyright by Volkswagen AG.

7.3 4-cylinder fuel injection engine with power assisted steering, vehicles ▸ 04.99

1 - Hexagon bolts

- ❑ 55 Nm
- ❑ With aluminium block: M10×55 mm, renew bolts (coated with sealant)
- ❑ With cast iron block: M10×50 mm
- ❑ Tightening sequence: upper right bolt first (item 1), then lower right bolt (item 3), and then upper and lower bolts on left (as seen looking forwards)

2 - Bracket

3 - Hexagon bolts

- ❑ With aluminium block: M10×100 mm, renew bolts (coated with sealant)
- ❑ With cast iron block: M10×95 mm
- ❑ Tightening sequence: upper right bolt first (item 1), then lower right bolt (item 3), and then upper and lower bolts on left (as seen looking for-

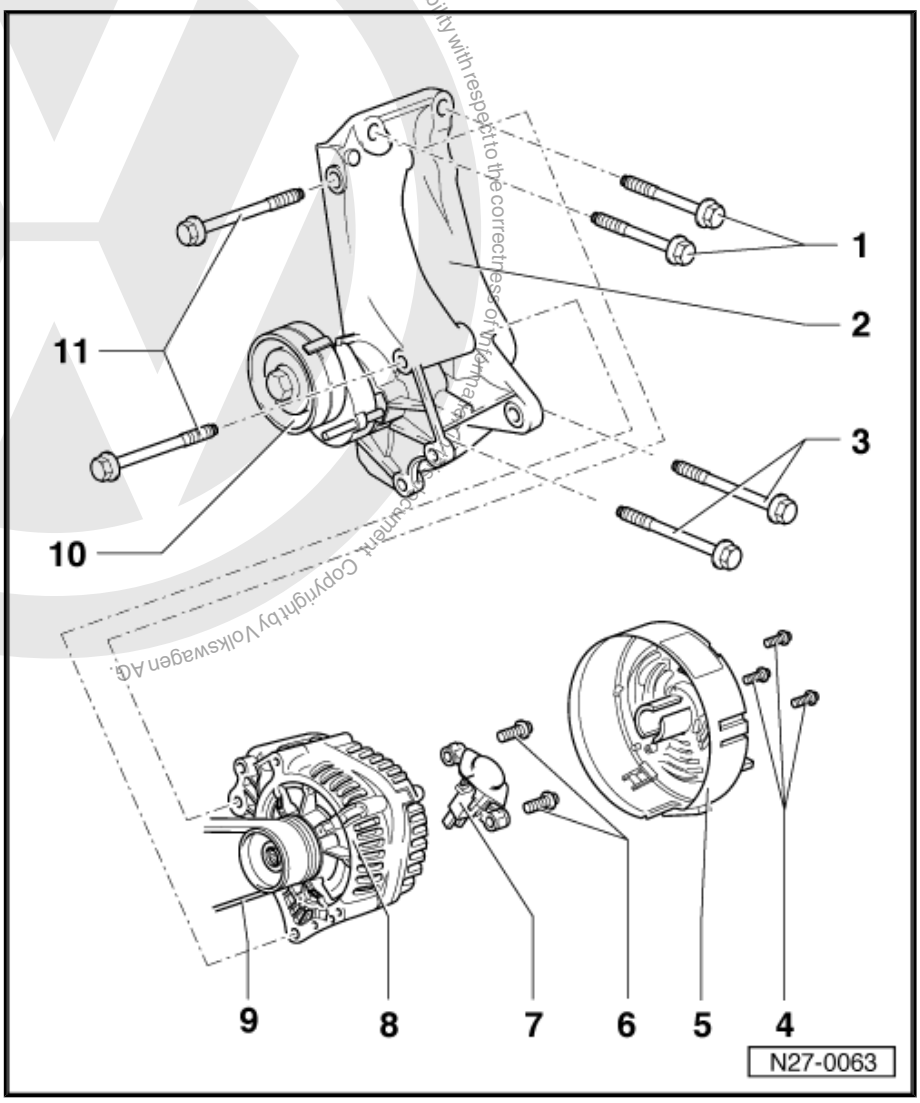

satelettronica

wards)

4 - Hexagon bolts

- ❑ M3×18mm

5 - Protective cap

6 - Cross-head screws

- ❑ M4×25 mm

7 - Voltage regulator

- ❑ Checking carbon brushes ⇒ page 30
- ❑ Removing and installing ⇒ page 30

8 - Alternator

- ❑ Prescribed torque for battery positive wire ⇒ page 29

9 - Poly V-belt

- ❑ Removing and installing ⇒ page 26
- ❑ Poly V-belt drive ⇒ page 23

10 - Tensioning roller

11 - Hexagon bolts

- ❑ M8×85 mm
- ❑ 25 Nm

Protected by copyright. Copying for private or commercial purposes, in part or in whole, is not permitted unless authorised by Volkswagen AG. Volkswagen AG does not guarantee or accept any liability with respect to the correctness of information in this document. Copyright by Volkswagen AG.
satelettronica

7.4 4-cylinder fuel injection engine with power assisted steering, vehicles 05.99 ▸

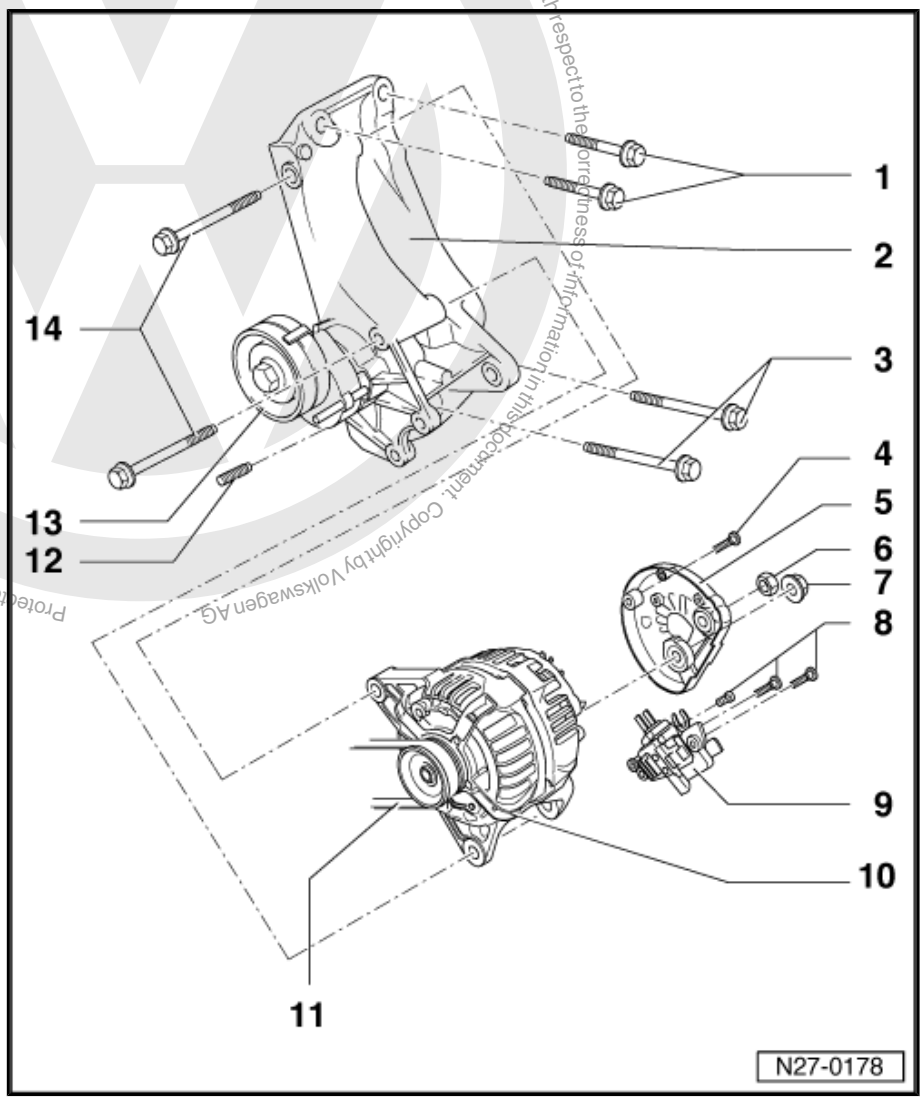

1 - Hexagon bolts
- ❑ M10×55 mm
- ❑ 50 Nm
- ❑ With aluminium block: renew bolts (coated with sealant)
- ❑ Tightening sequence: upper right bolt first (item 1), then lower right bolt (item 3), and then upper and lower bolts on left (as seen looking forwards)

2 - Bracket

3 - Hexagon bolts
- ❑ M10×100 mm
- ❑ 50 Nm
- ❑ With aluminium block: renew bolts (coated with sealant)
- ❑ Tightening sequence: upper right bolt first (item 1), then lower right bolt (item 3), and then upper and lower bolts on left (as seen looking forwards)

4 - Cross-head screw

5 - Protective cap

6 - Hexagon nut
- ❑ M8

7 - Hexagon nut
- ❑ M8

8 - Cross-head screws

9 - Voltage regulator
- ❑ Checking carbon brushes ⇒ page 31
- ❑ Removing and installing ⇒ page 32

10 - Alternator
- ❑ Prescribed torque for battery positive wire ⇒ page 30

11 - Poly V-belt
- ❑ Removing and installing ⇒ page 26
- ❑ Poly V-belt drive ⇒ page 23

12 - M8 sealing bolt with hexagon socket head

13 - Tensioning roller

14 - Hexagon bolts
- ❑ M8×85 mm
- ❑ 25 Nm

Protected by copyright. Copying for private and commercial purposes, in part or in whole, is not permitted unless authorised by Volkswagen AG. Volkswagen AG does not guarantee or accept any liability with respect to the correctness of information in this document. Copyright by Volkswagen AG
satelettronica

7.5 4-cylinder fuel injection engine with air conditioning compressor and power assisted steering, vehicles ▸ 04.99

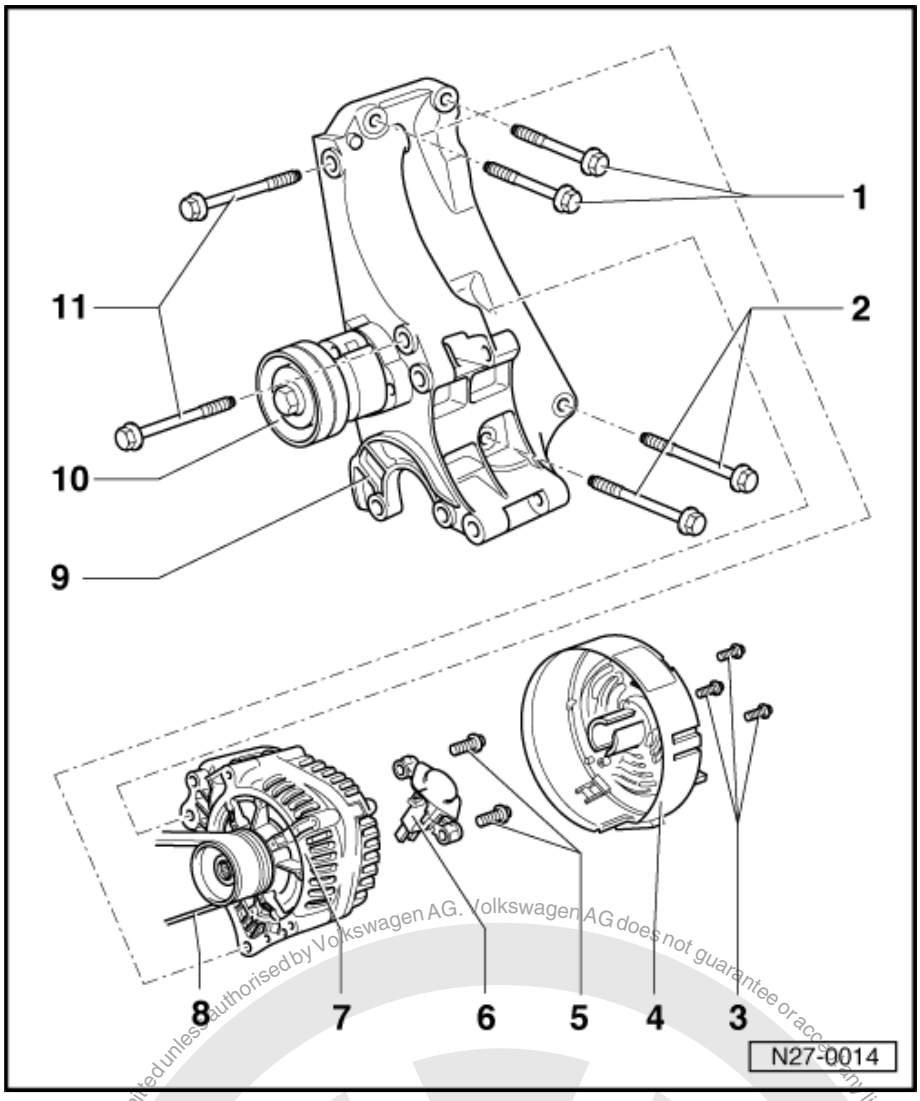

1 - Hexagon bolts
- ❑ 55 Nm
- ❑ With aluminium block: M10×55 mm, renew bolts (coated with sealant)
- ❑ With cast iron block: M10×50 mm
- ❑ Tightening sequence: upper right bolt first (item 1), then lower right bolt (item 2), and then upper and lower bolts on left (as seen looking forwards)

2 - Hexagon bolts
- ❑ With aluminium block: M10×100 mm, renew bolts (coated with sealant)
- ❑ With cast iron block: M10×95 mm
- ❑ Tightening sequence: upper right bolt first (item 1), then lower right bolt (item 2), and then upper and lower bolts on left (as seen looking forwards)

3 - Hexagon bolts
- ❑ M3×18mm

4 - Protective cap

5 - Cross-head screws
- ❑ M4×25 mm

6 - Voltage regulator
- ❑ Checking carbon brushes ⇒ page 30
- ❑ Removing and installing ⇒ page 30

7 - Alternator
- ❑ Prescribed torque for battery positive wire ⇒ page 29

8 - Poly V-belt
- ❑ Removing and installing ⇒ page 26
- ❑ Poly V-belt drive ⇒ page 23

9 - Bracket

10 - Tensioning roller

11 - Hexagon bolts
- ❑ M8×85 mm
- ❑ 25 Nm

Protected by copyright. Copying for private or commercial purposes, in part or in whole, is not permitted unless authorised by Volkswagen AG. Volkswagen AG does not guarantee or accept any liability with respect to the correctness of information in this document. Copyright by Volkswagen AG.
satelettronica

7.6 4-cylinder fuel injection engine with air conditioning compressor and power assisted steering, vehicles 05.99 ▸

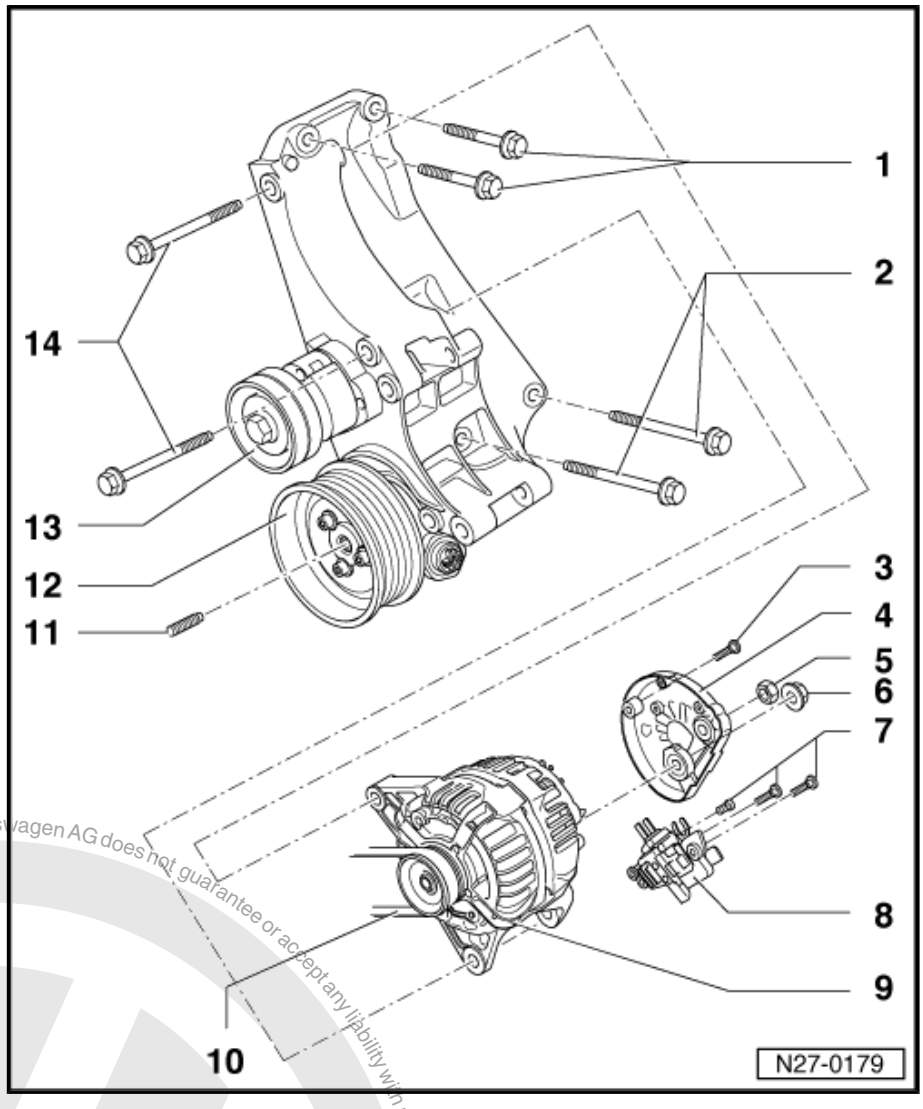

1 - Hexagon bolts
- ❑ M10×50 mm
- ❑ 45 Nm
- ❑ With aluminium block: renew bolts (coated with sealant)
- ❑ Tightening sequence: upper right bolt first (item 1), then lower right bolt (item 2), and then upper and lower bolts on left (as seen looking forwards)

2 - Hexagon bolts
- ❑ M10×95 mm
- ❑ 45 Nm
- ❑ With aluminium block: renew bolts (coated with sealant)
- ❑ Tightening sequence: upper right bolt first (item 1), then lower right bolt (item 2), and then upper and lower bolts on left (as seen looking forwards)

3 - Cross-head screw

4 - Protective cap

5 - Hexagon nut
- ❑ M8

6 - Hexagon nut
- ❑ M8

7 - Cross-head screws

8 - Voltage regulator
- ❑ Checking carbon brushes ⇒ page 31
- ❑ Removing and installing ⇒ page 32

9 - Alternator
- ❑ Prescribed torque for battery positive wire ⇒ page 30

10 - Poly V-belt
- ❑ Removing and installing ⇒ page 26
- ❑ Poly V-belt drive ⇒ page 23

11 - M8 sealing bolt with hexagon socket head

12 - Bracket

13 - Tensioning roller

14 - Hexagon bolts
- ❑ M8×85 mm
- ❑ 25 Nm

Protected by copyright. Copying for private or commercial purposes, in part or in whole, is not permitted unless authorised by Volkswagen AG. Volkswagen AG does not guarantee or accept any liability with respect to the correctness of information in this document. Copyright by Volkswagen AG.
satelettronica

7.7 4-cylinder diesel engine, vehicles ▸ 04.99

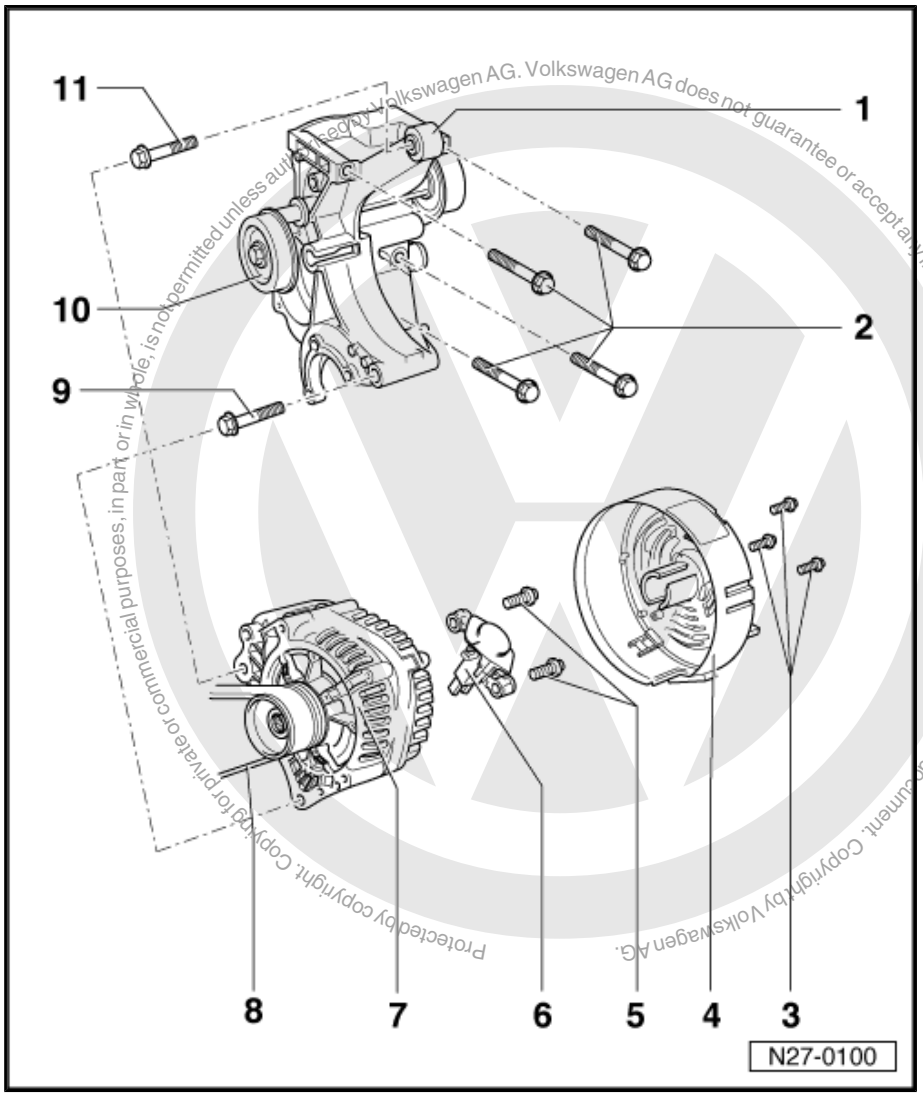

1 - Bracket

- ❑ Removing and installing ⇒ 4-cylinder diesel engine, Mechanics; Rep. Gr. 19 ; Removing and installing coolant pump and ancillary bracket

2 - Hexagon bolts

- ❑ M8×85 mm
- ❑ 25 Nm
- ❑ Observe tightening sequence ⇒ 4-cylinder diesel engine, Mechanics; Rep. Gr. 19 ; Removing and installing coolant pump and ancillary bracket .

3 - Hexagon bolts

- ❑ M3×18mm

4 - Protective cap

5 - Cross-head screws

- ❑ M4×25 mm

6 - Voltage regulator

- ❑ Checking carbon brushes ⇒ page 30
- ❑ Removing and installing ⇒ page 30

7 - Alternator

- ❑ Prescribed torque for battery positive wire ⇒ page 29

8 - Poly V-belt

- ❑ Removing and installing ⇒ page 27
- ❑ Poly V-belt drive ⇒ page 24

9 - Hexagon bolt

- ❑ 25 Nm

10 - Tensioning roller

11 - Hexagon bolt

- ❑ 25 Nm

Protected by copyright. Copying for private or commercial purposes, in part or in whole, is not permitted unless authorised by Volkswagen AG. Volkswagen AG does not guarantee or accept any liability with respect to the correctness of information in this document. Copyright by Volkswagen AG.
satelettronica

7.8 4-cylinder diesel engine, vehicles 05.99 ▸

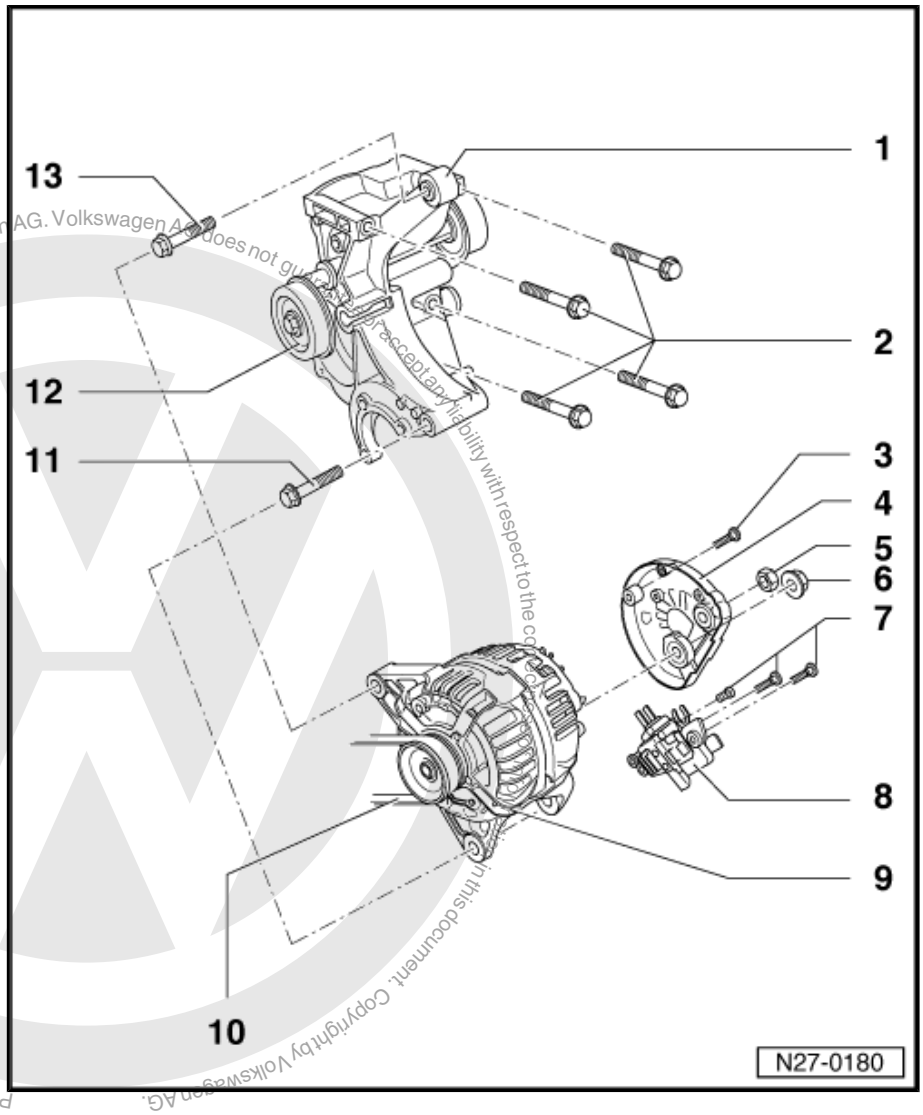

1 - Bracket

- ❑ Removing and installing ⇒ 4-cylinder diesel engine, Mechanics; Rep. Gr. 19 ; Removing and installing coolant pump and ancillary bracket

2 - Hexagon bolts

- ❑ M8×85 mm
- ❑ 25 Nm
- ❑ Observe tightening sequence ⇒ 4-cylinder diesel engine, Mechanics; Rep. Gr. 19 ; Removing and installing coolant pump and ancillary bracket .

3 - Cross-head screw

4 - Protective cap

5 - Hexagon nut

- ❑ M8

6 - Hexagon nut

- ❑ M8

7 - Cross-head screws

8 - Voltage regulator

- ❑ Checking carbon brushes ⇒ page 31
- ❑ Removing and installing ⇒ page 32

9 - Alternator

- ❑ Prescribed torque for battery positive wire ⇒ page 30

10 - Poly V-belt

- ❑ Removing and installing ⇒ page 27
- ❑ Poly V-belt drive ⇒ page 24

11 - Hexagon bolt

- ❑ M8×85 mm
- ❑ 25 Nm

12 - Tensioning roller

13 - Hexagon bolt

- ❑ M8×85 mm
- ❑ 25 Nm

Protected by copyright. Copyright by Volkswagen AG. Volkswagen AG does not guarantee or accept any liability with respect to the correctness of information in this document. Copyright by Volkswagen AG. Reproduction, in whole or in part, for commercial purposes, is not permitted unless authorised by Volkswagen AG.
satelettronica

7.9 3-cylinder diesel engine

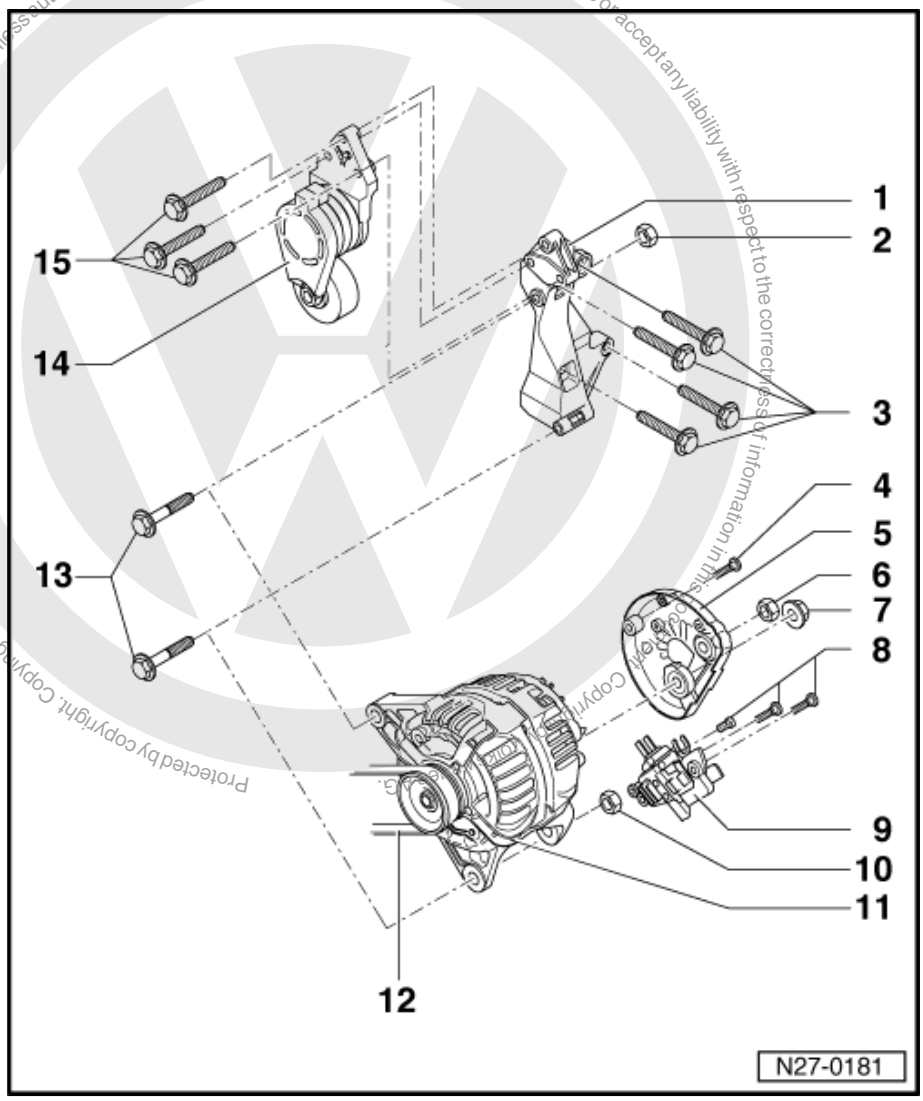

1 - Bracket

2 - Hexagon nut
- ❑ M8

3 - Hexagon bolts
- ❑ M10×55 mm
- ❑ 45 Nm

4 - Cross-head screw

5 - Protective cap

6 - Hexagon nut
- ❑ M8

7 - Hexagon nut
- ❑ M8

8 - Cross-head screws

9 - Voltage regulator
- ❑ Checking carbon brushes ⇒ page 31
- ❑ Removing and installing ⇒ page 32

10 - Hexagon nut
- ❑ M8

11 - Alternator
- ❑ Prescribed torque for battery positive wire ⇒ page 30

12 - Poly V-belt
- ❑ Removing and installing ⇒ page 28
- ❑ Poly V-belt drive ⇒ page 24
- ❑ Poly V-belt drive, with power steering vane pump ⇒ page 24
- ❑ Poly V-belt drive, with power steering vane pump and air conditioner compressor ⇒ page 24

13 - Hexagon bolts
- ❑ M8×85 mm
- ❑ 25 Nm

14 - Tensioning roller

15 - Hexagon bolts
- ❑ M8×60 mm

Protected by copyright. Copying for private or commercial purposes, in part or in whole, is not permitted unless authorised by Volkswagen AG. Volkswagen AG does not guarantee or accept any liability with respect to the correctness of information in this copyright.
satelettronica

7.10 Poly V-belt drives

4-cylinder fuel injection engine with basic belt drive

1 - Crankshaft/vibration damper/pulley

2 - Poly V-belt - crankshaft/vibration damper and alternator

3 - Pulley - alternator

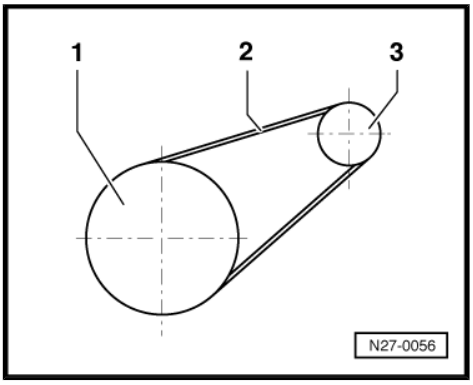

4-cylinder fuel injection engine with power assisted steering vane pump

1 - Crankshaft/vibration damper/pulley

2 - Poly V-belt - crankshaft/vibration damper, tensioning roller, alternator and power steering vane pump

3 - Pulley - power steering vane pump

4 - Pulley - alternator

5 - Tensioning roller

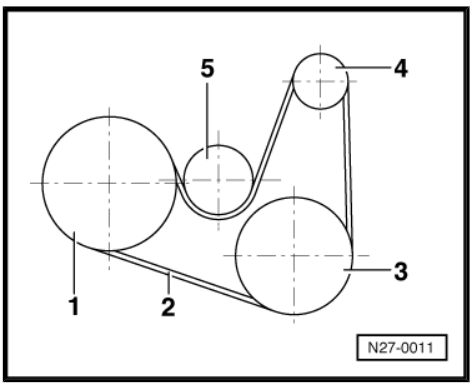

4-cylinder fuel injection engine with power assisted steering vane pump and air conditioner compressor

1 - Crankshaft/vibration damper/pulley

2 - Tensioning roller

3 - Pulley - alternator

4 - Pulley - air conditioner compressor

5 - Pulley - power steering vane pump

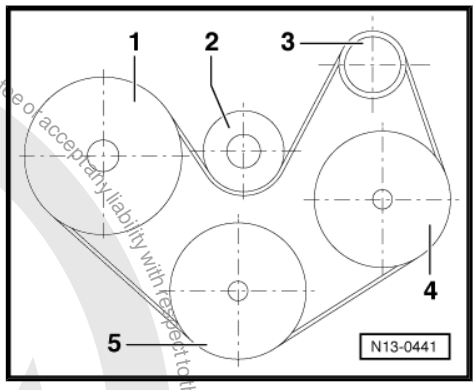

4-cylinder fuel injection engine with power assisted steering vane pump and air conditioner compressor (1.6 l, 16 valve engines)

1 - Pulley - power steering vane pump

2 - Idler roller

3 - Pulley - alternator

4 - Pulley - air conditioner compressor

5 - Crankshaft/vibration damper/pulley

6 - Tensioning roller

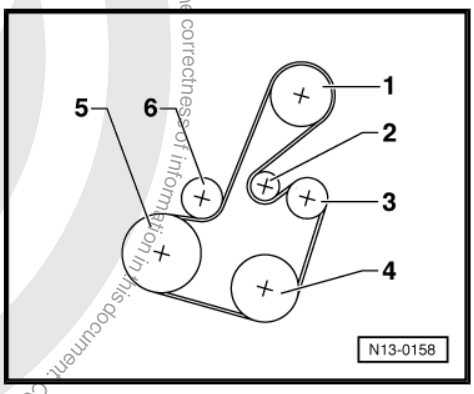

Protected by copyright. Copying for private or commercial purposes, in part or in whole, is not permitted unless authorised by Volkswagen AG. Volkswagen AG does not guarantee or accept any liability with respect to the correctness of information in this document. Copyright by Volkswagen AG.
satelettronica

4-cylinder diesel injection engine with power assisted steering vane pump

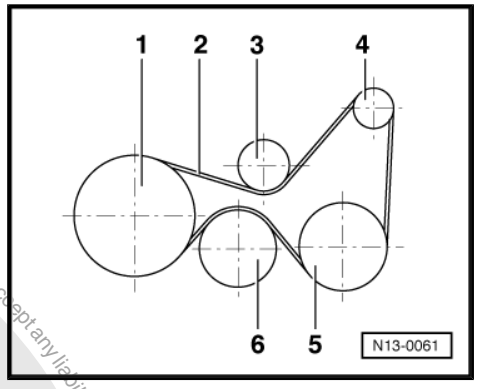

1 - Crankshaft/vibration damper/pulley

2 - Poly V-belt - tensioning roller, alternator, power steering vane pump, coolant pump and crankshaft/vibration damper

3 - Tensioning roller

4 - Pulley - alternator

5 - Pulley - power steering vane pump

6 - Pulley - cooling system pump

3-cylinder diesel engine

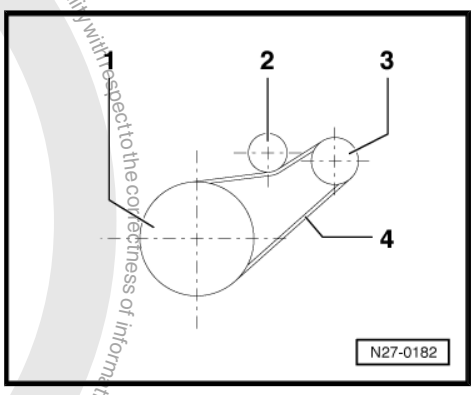

1 - Crankshaft/vibration damper/pulley

2 - Tensioning roller

3 - Pulley - alternator

4 - Poly V-belt - tensioning roller, alternator and crankshaft/vibration damper

3-cylinder diesel injection engine with power assisted steering vane pump

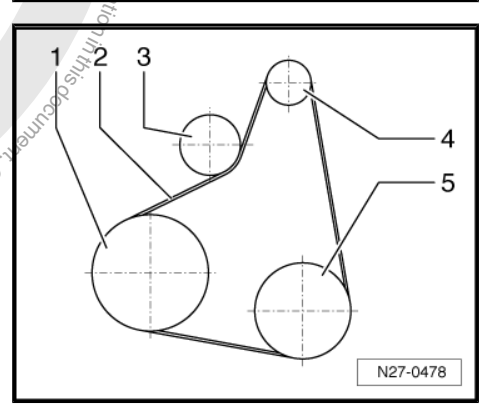

1 - Crankshaft/vibration damper/pulley

2 - Poly V-belt - tensioning roller, alternator, power steering vane pump and crankshaft/vibration damper

3 - Tensioning roller

4 - Pulley - alternator

5 - Pulley - power steering vane pump

3-cylinder diesel engine with power assisted steering vane pump and air conditioner compressor

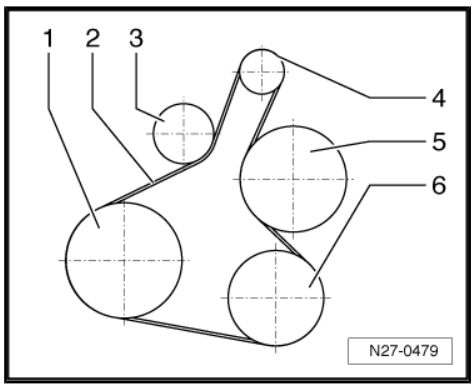

1 - Crankshaft/vibration damper/pulley

2 - Poly V-belt - tensioning roller, alternator, power steering vane pump, air conditioner compressor, and crankshaft/vibration damper

3 - Tensioning roller

4 - Pulley - alternator

5 - Pulley - air conditioner compressor

6 - Pulley - power steering vane pump

7.11 Checking V-belt

– Check for:

- Sub-surface cracks (cracks, core ruptures, cross sectional breaks)
- Layer separation (top layer, cord strands)
- Base break-up

Protected by copyright. Copyright by Volkswagen AG.
Copyright by Volkswagen AG does not guarantee or accept any liability with respect to the correctness of information in this document.
Copy for private or commercial purposes, in part or in whole, is not permitted unless authorised by Volkswagen AG.
satelettronica

- Fraying of cord strands
- Flank wear (material wear, frayed flanks, flank brittleness - glassy flanks-, surface cracks)
- Traces of oil and grease

Note

- *Mark direction of rotation before removing the V-belt. Ensure rotation of direction is correct when installing. Installing V-belt opposite to the direction of rotation will destroy the belt!*
- *If damage is established, replace V-belt immediately to prevent failure or functional faults!*

7.12 Removing and installing poly V-belt

Note

- *If the used poly V-belt is to be reinstalled, then mark the direction of rotation before removing the poly V-belt. When reinstalling, ensure the poly V-belt is installed in the correct direction of rotation. Installing the poly V-belt opposite to the direction of rotation will destroy the belt!*
- *It is not necessary to adjust the poly V-belt tension, as a spring loaded tensioner guarantees the best possible belt tension.*

7.12.1 4-cylinder fuel injection engine with basic belt drive

Special tools and workshop equipment required

- Torque wrench -V.A.G 1331-

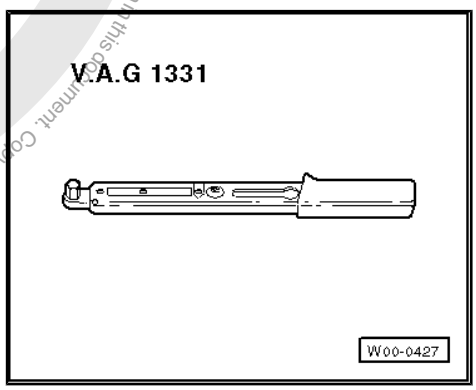

- Tensioning arm -3297-

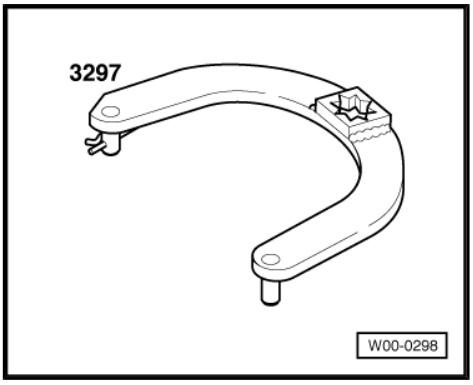

Protected by copyright. Copying for private or commercial purposes, in part or in whole, is not permitted unless authorised by Volkswagen AG. Volkswagen AG does not guarantee or accept any liability with respect to the correctness of information in this document. Copyright by Volkswagen AG.
satelettronica

Removing poly V-belt:

– Mark direction of rotation of poly V-belt if it is to be reused.

– Loosen alternator securing bolts at least one turn.

– Fit tensioning lever -3297- , secure with pin -arrow- and pivot alternator downwards (to operate tensioning lever 3297, use e.g. torque wrench -V.A.G 1331-).

– Remove poly V-belt.

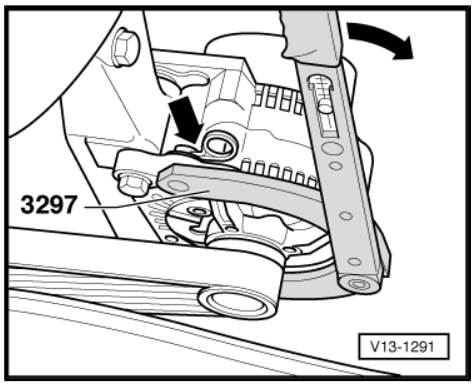

Installing poly V-belt:

Note

- *When installing used poly V-belts observe the direction of rotation marked on removal!*
- *When fitting belt, ensure that poly V-belt seats correctly in pulleys!*

– Fit poly V-belt to crankshaft pulley/vibration damper first. Alternator belt pulley remains free.

– Lower alternator with tensioning lever -3297- and place poly V-belt on alternator pulley.

– Push alternator down at least 3 times onto stop with tensioning lever -3297- to ensure the alternator moves freely.

– After fitting poly V-belt, and with alternator loose, rotate engine several times (approx. 10 revolutions of engine), to do this operate starter briefly, but do not start engine.

Note

When tightening keep to the sequence given, do not use the alternator for support and do not touch poly V-belt.

– Tighten alternator lower securing bolt first and then upper securing bolt to 25 Nm.

– Start engine and check belt running.

7.12.2 4-cylinder fuel injection engine with air conditioner compressor and power assisted steering vane pump

Removing poly V-belt:

– Remove cover for poly V-belt.

– Mark direction of rotation of poly V-belt if it is to be reused.

Protected by copyright. Copying for private or commercial purposes, in part or in whole, is not permitted unless authorised by Volkswagen AG. Volkswagen AG does not guarantee or accept any liability with respect to the correctness of information in this document. Copyright by Volkswagen AG.
satelettronica

– Using a spanner on the securing bolt, swivel tensioning roller in direction of arrow.

– Remove poly V-belt.

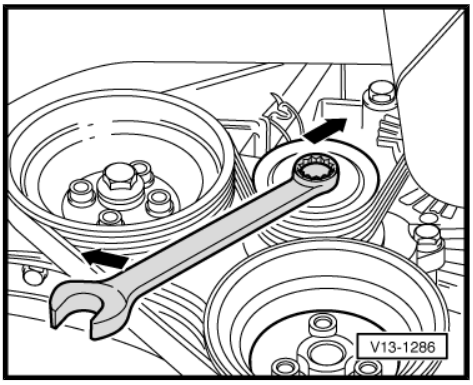

Installing poly V-belt:

Note

♦ *When installing used poly V-belts observe the direction of rotation marked on removal!*

♦ *Before installing poly V-belt, ensure that all ancillaries (alternator, air conditioner compressor, vane pump) are secure.*

♦ *When fitting belt, ensure that poly V-belt seats correctly in pulleys!*

– Using a spanner on the securing bolt, swivel tensioning roller in direction of arrow.

– Place poly V-belt onto crankshaft/vibration damper pulley first. Fit belt onto tensioning roller last.

– Start engine and check belt running.

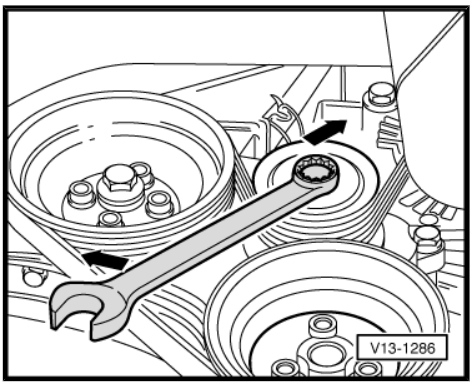

7.12.3 4-cylinder diesel engine

Special tools and workshop equipment required

♦ Ring spanner -T10024-

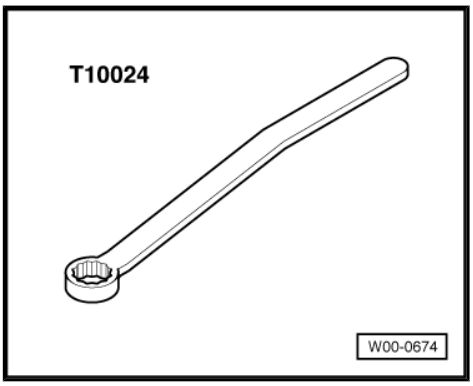

Removing poly V-belt:

– Remove noise insulation.

– Mark direction of rotation of poly V-belt if it is to be reused.

Copyright by Volkswagen AG. Volkswagen AG does not guarantee or accept any liability with respect to the correctness of information in this document. Copyright by Volkswagen AG. Protected by copyright. Copying for private or commercial purposes, in part or in whole, is not permitted unless authorised by Volkswagen AG.
satelettronica

Protected by copyright. Copying for private or commercial purposes, in part or on whole, is not permitted unless authorised by Volkswagen AG. Volkswagen AG does not guarantee or accept any liability with respect to the correctness of content. Copyright by Volkswagen AG.

– Swivel tensioning roller on tensioning lever in direction of arrow.
– Remove poly V-belt.

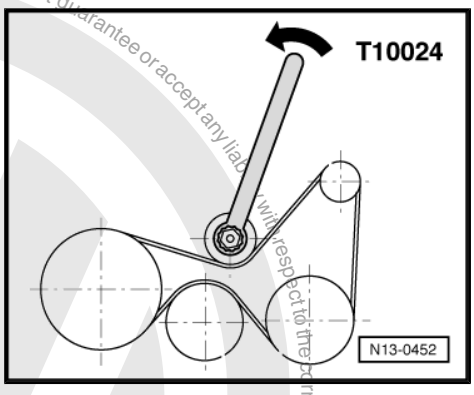

Installing poly V-belt:

Note

- *When installing used poly V-belts observe the direction of rotation marked on removal!*
- *When fitting belt, ensure that poly V-belt seats correctly in pulleys!*

– Swivel tensioning roller on tensioning lever in direction of arrow.
– Fit poly V-belt.
– Start engine and check belt running.
– Install noise insulation.

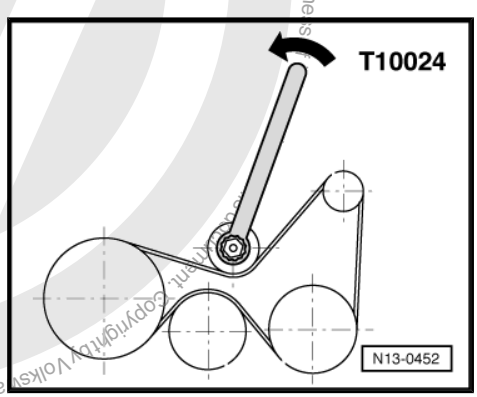

7.12.4 3-cylinder diesel engine

Special tools and workshop equipment required

- Locking pin -T10060 A-

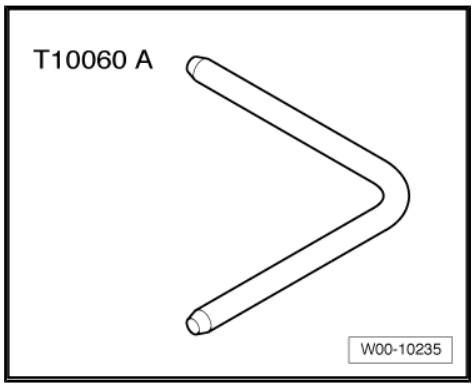

Removing poly V-belt:

– Remove noise insulation.
– Remove the intake suction hose/charge air cooler connecting pipe and air mass meter.
– Mark direction of rotation of poly V-belt.

satelettronica

– To slacken poly V-belt, turn tensioning element in direction of arrow.

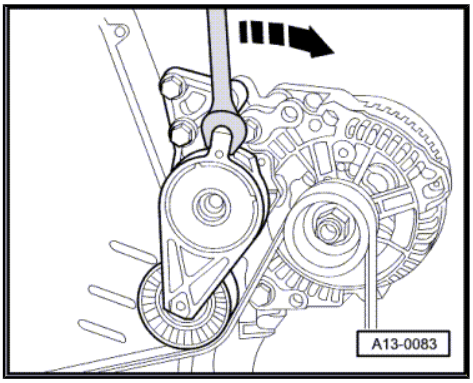

– Lock tensioning element using locking pin -T10060 A- .

– Remove poly V-belt.

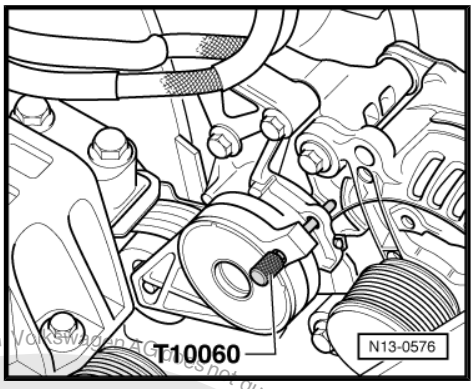

Installing poly V-belt:

Installation is carried out in the reverse order. When installing observe the following:

Note

- *Before installing poly V-belt, ensure that all ancillaries (alternator, air conditioner compressor, vane pump) are secure.*
- *When installing poly V-belt observe direction of rotation and correct seat of belt.*
- *On vehicles without air conditioning system, fit poly V-belt on alternator last.*
- *On vehicles with air conditioning system, fit poly V-belt on air conditioner compressor last.*

On completing work:

– Start engine and check belt running.

7.13 Compact alternator with poly V-belt drive, vehicles ▸ 04.99

7.13.1 Securing B+ (battery positive) wire to alternator

Note

- *If the B+ wire is not tightened to the specified torque setting, the following may occur:*
- *The battery will not be charged fully.*
- *Vehicle electrics or electronics fail completely (breakdown).*
- *Danger of fires from sparks*
- *Damage to electronic components and control units due to excessive voltage*

Protected by copyright. Copyright by Volkswagen AG. Copyright by Volkswagen AG. Volkswagen AG does not guarantee or accept any liability with respect to the correctness of information in this document. Copyright by Volkswagen AG. Copyright. Copying for private or commercial purposes, in part or in whole, is not permitted unless authorised by Volkswagen AG.
satelettronica

The torque setting for the B+ wire -arrow- securing nut is 15 Nm.

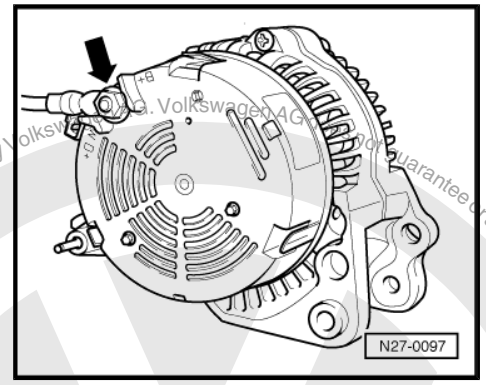

7.14 Checking carbon brushes for alternator, vehicles ▸ 04.99

Length of new carbon brushes = 12 mm

Wear limit = 5 mm

Carbon brush tolerance to one another = 1mm

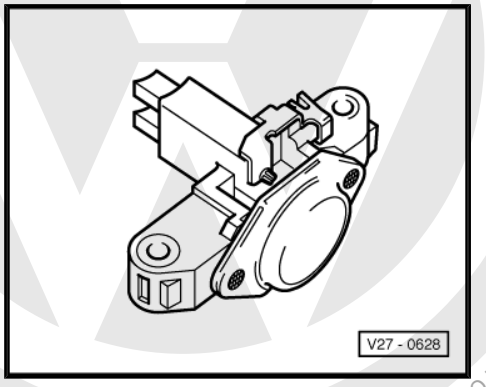

7.15 Removing and installing voltage regulator for alternator, vehicles ▸ 04.99

– Unscrew protective cap securing bolts -arrows- and remove protective cap.

– Remove voltage regulator securing screws and remove voltage regulator.

Installation is carried out in the reverse sequence.

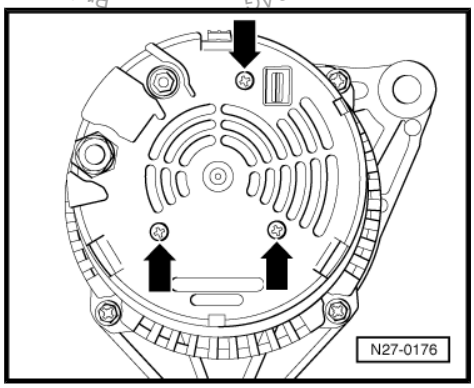

7.16 Compact alternator with poly V-belt drive, vehicles 05.99 ▸

From 05.99 compact alternators with a revised shape and different terminal designation have been introduced.

External distinguishing features of new compact alternators compared to the previously used compact alternators are:

- Revised voltage regulator
- Oval, radially sealed socket for 2-pin connector housing instead of previous square 2-pin connector
- Revised terminal designation for connections ⇒ Current flow diagrams, Electrical fault finding and Fitting locations

Protected by copyright. Copying for private or commercial purposes, in part or in whole, is not permitted unless authorised by Volkswagen AG. Volkswagen AG does not guarantee or accept any liability with respect to the correctness of information in this document. Copyright by Volkswagen AG.
satelettronica

7.16.1 Securing B+ (battery positive) wire to alternator

Note

- *The threaded connection for the + wire on the compact alternator is designated B1+!*
- *If the B1+ wire is not tightened to the specified torque setting, the following may occur:*
- *The battery will not be charged fully.*
- *Vehicle electrics or electronics fail completely (breakdown).*
- *Danger of fires from sparks*
- *Damage to electronic components and control units due to excessive voltage*

The torque setting for the securing nut of B1+ wire -arrow- is 15 Nm.

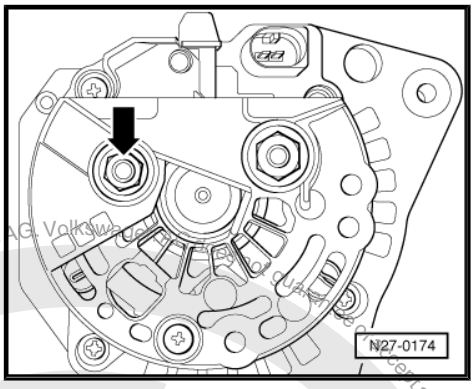

7.17 Checking carbon brushes for alternator, vehicles 05.99 ▸

Length of new carbon brushes = 12 mm

Wear limit = 5 mm

Carbon brush tolerance to one another = 1mm

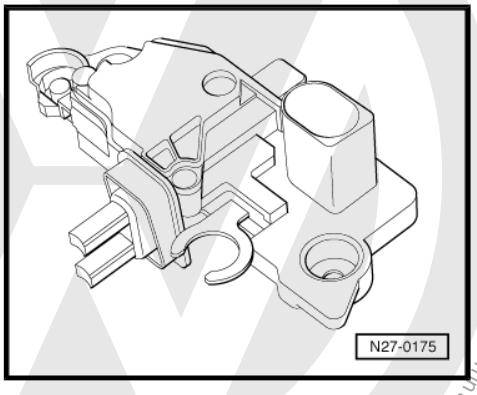

Protected by copyright. Copying for private or commercial purposes, in part or in whole, is not permitted unless authorised by Volkswagen AG. Volkswagen AG does not guarantee or accept any liability with respect to the correctness of information in this document. Copyright by Volkswagen AG.
satelettronica

7.18 Removing and installing voltage regulator for alternator, vehicles 05.99 ▸

– Unscrew securing nuts -arrows A- and remove securing bolt -arrow B- for protective cap and remove protective cap.

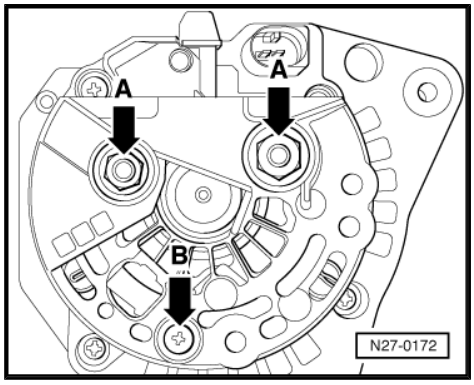

– Remove voltage regulator securing bolt -arrows- and remove voltage regulator.

Installation is carried out in the reverse sequence.

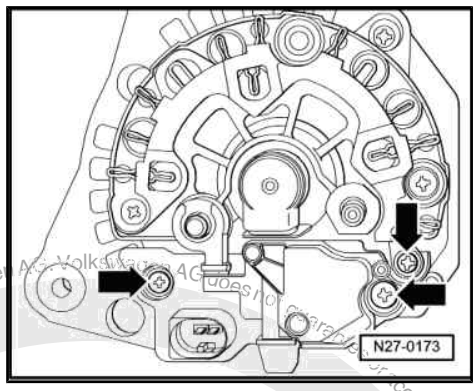

7.19 Removing and installing poly V-belt pulley without freewheel

Special tools and workshop equipment required

♦ Torque wrench -V.A.G 1332-

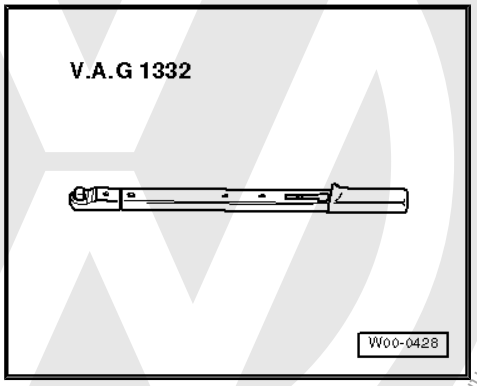

♦ Socket -3310-

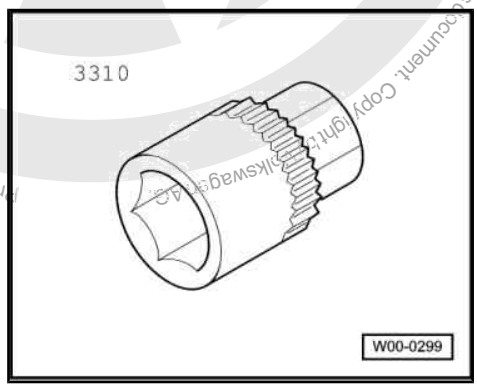

satelettronica

Use socket drive 3310 to loosen or tighten poly V-belt pulley on alternator.

The torque setting for the securing nut of the poly V-belt pulley is 65 Nm.

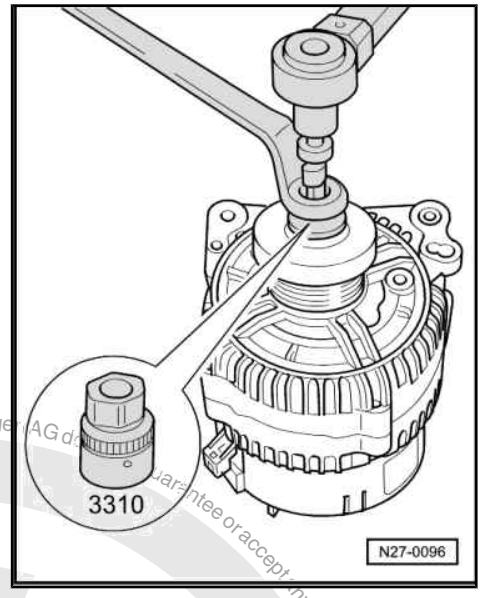

7.20 Removing and installing poly V-belt pulley with freewheel

Note

- *A poly V-belt pulley with freewheel can be retrofitted in vehicles fitted with a Bosch alternator ‣ 04.99.*
- *A poly V-belt pulley with freewheel can be retrofitted in vehicles fitted with a Valeo alternator ‣ 04.99.*
- *Valeo alternators must be renewed completely for a Bosch alternator.*
- *On alternators 05.99 ‣ the poly V-belt pulley with freewheel is the same on all alternators used (different manufacturers).*

Special tools and workshop equipment required

- Multipoint adapter -VAS 3400-

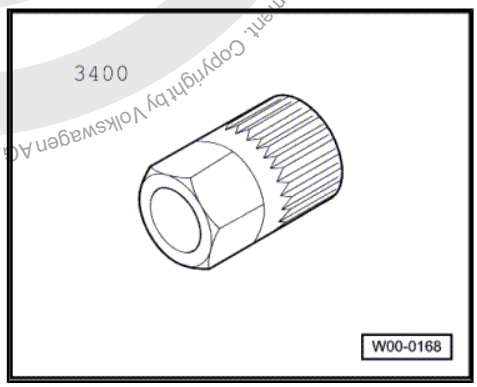

Protected by copyright. Copying for private or commercial purposes, in part or in whole, is not permitted unless authorised by Volkswagen AG. Volkswagen AG does not guarantee or accept any liability with respect to the correctness of information in this document. Copyright by Volkswagen AG.
satelettronica

♦ Torque wrench -V.A.G 1332-

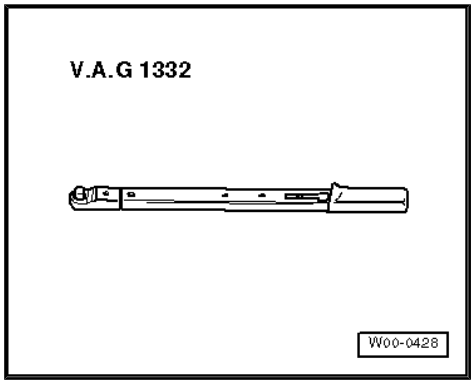

Removing:

– Remove alternator.

– Clamp alternator on bracket points in bench vice.

– Remove protective cap from poly V-belt pulley with freewheel.

– Insert multi-point adapter -VAS 3400- with ring spanner 17 mm in poly V-belt pulley with freewheel of alternator.

– Insert a M10 multi-point bit -1- into alternator shaft.

– Hold alternator shaft and loosen poly V-belt with freewheel using a ring spanner and turning it anti-clockwise.

– Hold poly V-belt pulley with freewheel by hand. Turn alternator drive shaft until poly V-belt pulley with freewheel can be removed.

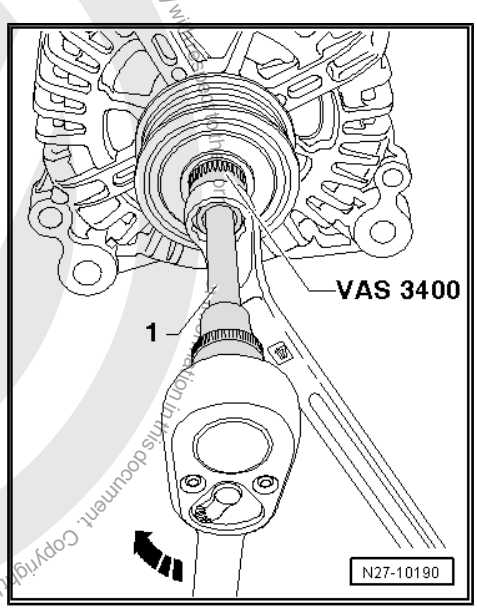

Installing:

Install in the reverse order of removal. When doing this, note the following:

– First screw poly V-belt pulley with freewheel on drive shaft of alternator by hand as far as limit stop.

The torque wrench -V.A.G 1332- must be modified for assembly of poly V-belt with freewheel as follows:

– Release socket drive -1- and pull off grip -2-.

– Turn grip -2- of torque wrench through 180 degrees and reinsert socket drive.

– Set turning direction of torque wrench to anti-clockwise on socket drive.

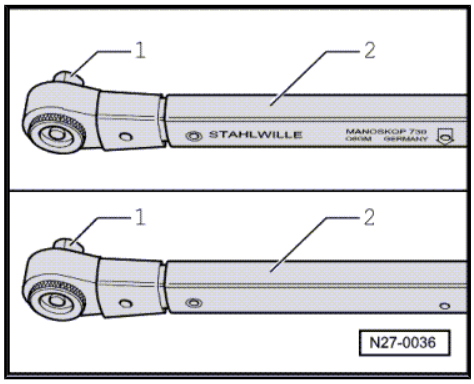

satelettronica

– Insert a M10 multi-point bit -1- into alternator shaft.
– Counterhold using multi-point adapter -VAS 3400- and ring spanner 17 mm.
– Tighten poly V-belt with freewheel by turning drive shaft of alternator clockwise using torque wrench -V.A.G 1332- .
– Tighten threaded connection to specified torque of 80 Nm.

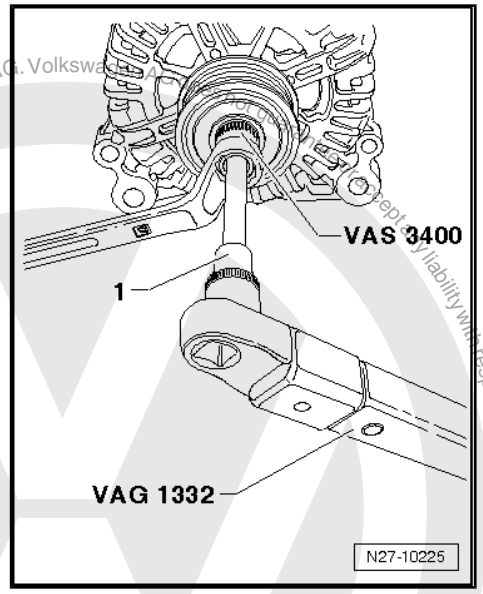

Protected by copyright. Copying for private or commercial purposes, in part or in whole, is not permitted unless authorised by Volkswagen AG. Volkswagen AG does not guarantee or accept any liability with respect to the correctness of information in this document. Copyright by Volkswagen AG.
satelettronica

90 – Gauges, instruments

1 Dash panel insert for vehicles ▸ 1997

1.1 Removing and installing dash panel insert

Note

- *To disconnect and reconnect the battery, the procedure described in the workshop manual should be strictly adhered to* *⇒ page 4* *.*
- *When the battery is reconnected, check the vehicle equipment (radio, clock, window regulators) as per Workshop Manual and/or the Owner's Manual.*
- *There is no need to remove the steering wheel. For ease of illustration the steering wheel is not shown in the following illustrations.*

Removing:

– Disconnect battery ⇒ page 4 .

– Remove upper securing bolts -arrows-.

– Then plastic trim can be pulled out backwards.

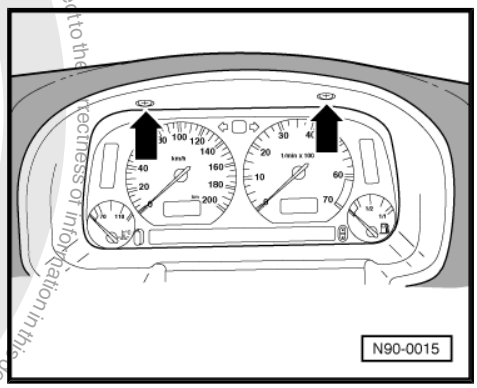

– Remove the two securing bolts on left and right -arrows-.

– Fold dash panel insert out backwards.

– Disconnect multi-pin connector on back of dash panel insert.

– Take out dash panel insert.

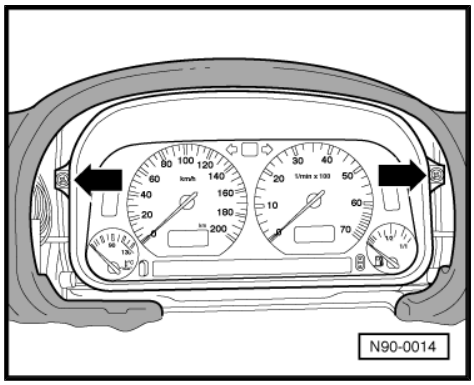

Installing:

Installation is carried out in reverse order of removal.

satelettronica

1.2 Renewing bulbs in dash panel insert (VDO)

Note

- *The dash panel insert must not be dismantled.*
- *Information on checking voltages and bulbs with test box - V.A.G 1598- ⇒ page 40 .*
- *Fault finding programmes for specific systems and current circuits ⇒ Current flow diagrams, Electrical fault finding and Fitting locations*

1 - Bulb with holder (bulb for dash panel insert illumination L10)

- ❑ 12 V/1.2 W

2 - Bulb with holder (right turn signal warning lamp K94)

- ❑ 12 V/1.1 W

3 - Bulb with holder (main beam warning lamp K1)

- ❑ 12 V/1.1 W

4 - Bulb with holder (left turn signal warning lamp K65)

- ❑ 12 V/1.1 W

5 - Bulb with holder (digital clock illumination bulb)

- ❑ 12 V/1.1 W

6 - Bulb with holder (odometer display illumination bulb)

- ❑ 12 V/1.1 W

7 - Multi-pin connector on dash panel insert

- ❑ Pin assignment ⇒ page 40

8 - Bulb with holder (various warning lamps, dependant on equipment installed in vehicle)

- ❑ 12 V/1.1 W

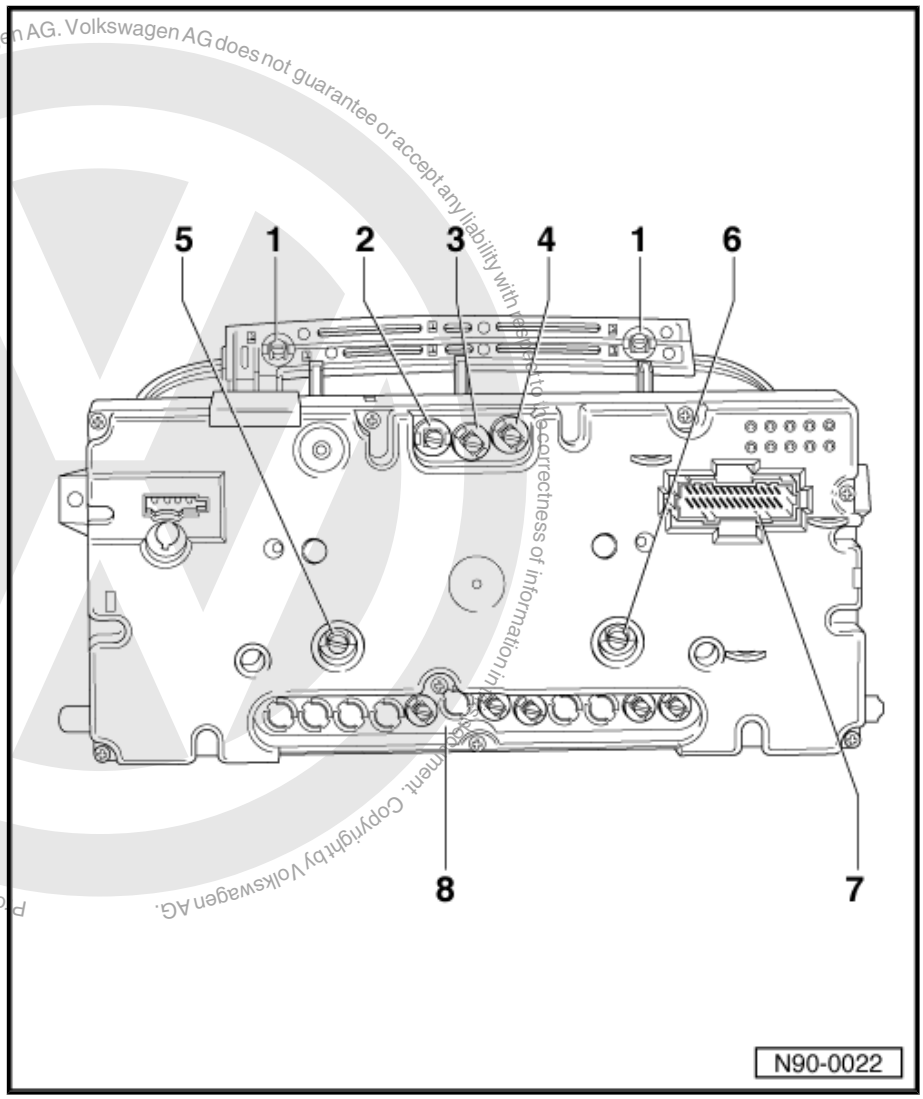

satelettronica

1.3 Renewing bulbs in dash panel insert (MOTOMETER)

Protected by copyright. Copying for private or commercial purposes, in part or in whole, is not permitted unless authorised by Volkswagen AG. Volkswagen AG does not guarantee or accept any liability with respect to the correctness of information in this document. Copyright by Volkswagen AG.

Note

- *The dash panel insert must not be dismantled.*
- *Information on checking voltages and bulbs with test box - V.A.G 1598- ⇒ page 40 .*
- *Fault finding programmes for specific systems and current circuits ⇒ Current flow diagrams, Electrical fault finding and Fitting locations*

1 - Bulb with holder (bulb for dash panel insert illumination L10)

- ❑ 12 V/1.2 W

2 - Bulb with holder (right turn signal warning lamp K94)

- ❑ 12 V/1.1 W

3 - Bulb with holder (main beam warning lamp K1)

- ❑ 12 V/1.1 W

4 - Bulb with holder (left turn signal warning lamp K65)

- ❑ 12 V/1.1 W

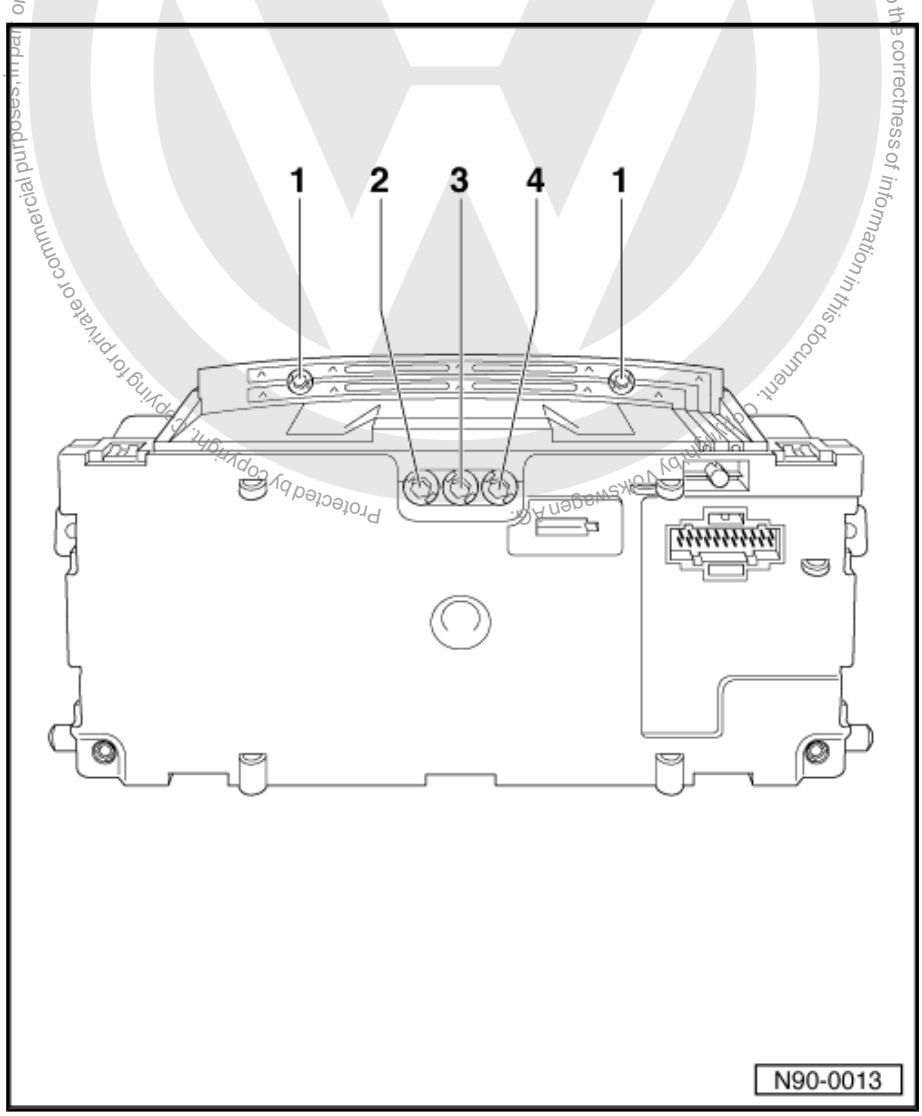

satelettronica

1.4 Dash panel insert (MOTOMETER) warning lamp symbols

Note

- *The warning lamp arrangement in the dash panel insert is dependent upon the equipment level, engine and country version of the vehicle.*
- *If, due to an incorrect assignment of warning lamps, a warning lamp symbol which does not belong to the equipment variant lights up, this incorrect assignment is to be corrected using the following description.*

1 - Left turn signal

2 - Main beam

3 - Right turn signal

4 - Fuel gauge

5 - Fog lights

6 - Anti-lock brake system (ABS)

7 - Brake wear warning

8 - Brake test / brake system fault warning

9 - Glow period check

10 - Alternator

11 - Oil pressure

12 - Airbag

13 - Turn signal repeater / side light check

14 - Rear fog light

15 - Coolant

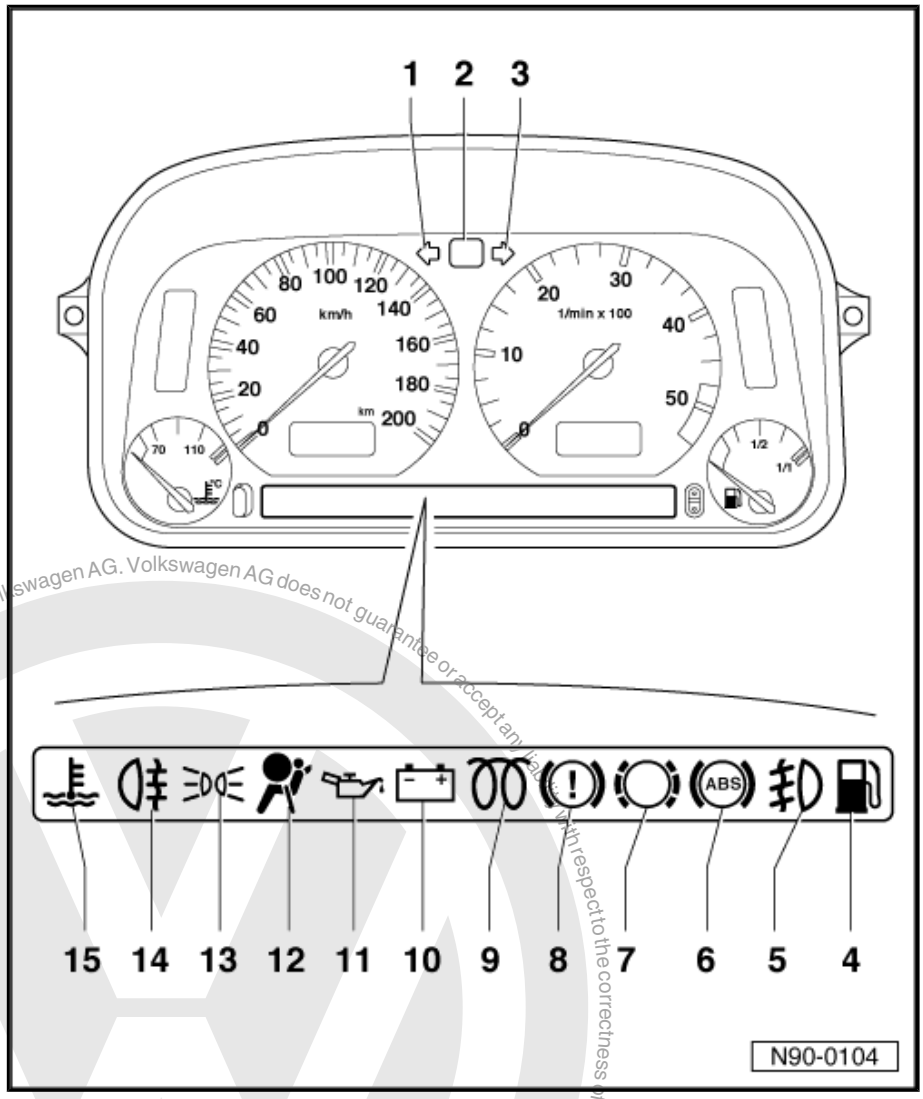

Protected by copyright. Copying for private or commercial purposes, in part or in whole, is not permitted unless authorised by Volkswagen AG. Volkswagen AG does not guarantee or accept any liability with respect to the correctness of information in this document. Copyright by Volkswagen AG.
satelettronica

1.5 Pin assignment on dash panel insert

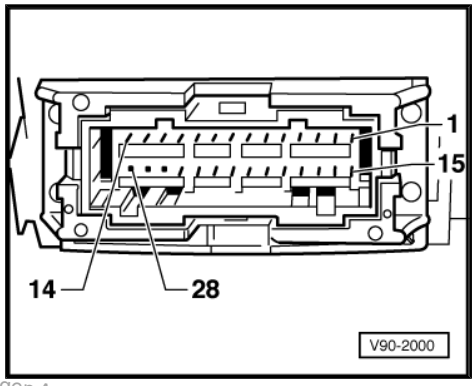

1 - Not assigned

2 - Cooling system low level indicator

3 - Terminal 31, earth

4 - Not assigned

5 - Terminal 31, electronics earth

6 - MFI save switch (memory)

7 - Hall sender / inductive sender exit

8 - Oil pressure switch 1.8 bar

9 - Oil pressure switch 0.3 bar

10 - Terminal 1 / terminal W

11 - Terminal 30 battery positive, clock

12 - Terminal 58b, dash panel insert illumination

13 - Terminal 15, general

14 - Belt

15 - Not assigned

16 - Alternator warning lamp, terminal 61

17 - Not assigned

18 - Twin circuit brakes and handbrake system warning lamp

19 - Ambient temperature sensor, signal

20 - Glow period warning lamp / CAT / check / choke

21 - Fuel gauge

22 - Left turn signal warning lamp

23 - Coolant temperature gauge

24 - Right turn signal warning lamp

25 - Main beam warning lamp

26 - Not assigned

27 - Speed signal from speedometer sender -G22- , electronic speedometer input

28 - Rear fog light

1.6 Checking voltages and bulbs with test box -V.A.G 1598-

Note

- *For checking use hand-held multimeter -V.A.G 1526- , test lamp -V.A.G 1527- and test box -V.A.G 1598- with adapter cable -V.A.G 1598/8- .*
- *Fault finding programme for dash panel insert ⇒ Current flow diagrams, Electrical fault finding and Fitting locations*

– Removing dash panel insert ⇒ page 36

Protected by copyright. Copying for private or commercial purposes, in part or in whole, is not permitted unless authorised by Volkswagen AG. Volkswagen AG does not guarantee or accept any liability with respect to the correctness of information in this document. Copyright by Volkswagen AG.
satelettronica

– Connect test box -V.A.G 1598- with adapter cable -V.A.G 1598/8- to dash panel insert and disconnected wiring harness (connectors must engage audibly).

1 - Dash panel insert

2 - Test box -V.A.G 1598- with connecting cable

3 - Hand-held multimeter -V.A.G 1526-

4 - Adapter line -V.A.G 1598/8-

5 - Dash panel insert wiring harness

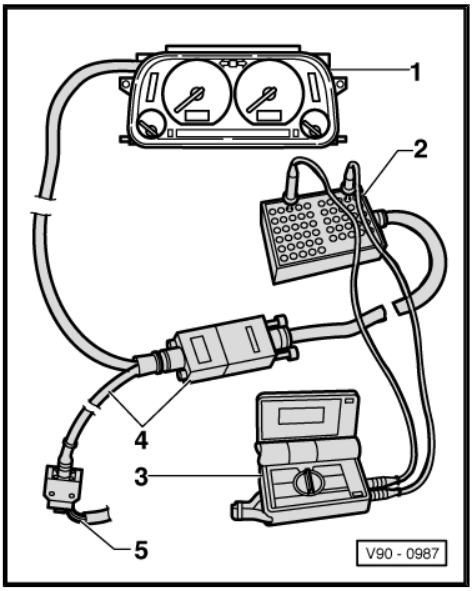

1.6.1 Test prerequisites:

- Battery voltage OK
- Affected fuses OK (see current flow diagram)
- Hand-held multimeter: set to voltage measurement -V-

Note

- *In case of deviation from specification, check wiring harness according to current flow diagram.*
- *If specification is reached during test steps 1 and 2, dash panel insert must be renewed.*
- *If specification is reached during test steps 3 and 9, respective bulb must be checked. Dash panel insert must only be renewed when bulb is OK.*

Test step	-V.A.G 1598- Bushes	The voltage supply is tested	Test conditions and additional work	Specifications
1	11 + 3	Terminal 30/ terminal 31	Ignition switched off	Approx. battery voltage
2	13 + 3	Terminal 15/ terminal 31	Ignition switched on	Approx. battery voltage
3[1)]	22 + 3	Left turn signal warning lamp	Ignition switched on Connect test lamp Switch on left turn signal	Test lamp flashes
4[1)]	24 + 3	Right turn signal warning lamp	Ignition switched on Connect test lamp Switch on right turn signal	Test lamp flashes

1) Use -V.A.G 1527- test lamp.

Protected by copyright. Copying for private or commercial purposes, in part or in whole, is not permitted unless authorised by Volkswagen AG. Volkswagen AG does not guarantee or accept any liability with respect to the correctness of information in this document. Copyright by Volkswagen AG.
satelettronica

Test step	- V.A.G 1598- Bushes	The voltage supply is tested	Test conditions and additional work	Specifications
5	12 + 3	Bulbs for illumination of dash panel insert, digital clock MFI and distance display	Ignition switched on Switch on light switch	Approx. 2.5 V to battery voltage, depending on position of controller E20
6	25 + 3	Main beam warning lamp	Ignition switched on Switch on main beam	Approx. battery voltage
7	18 + 3	Twin circuit brakes and handbrake system warning lamp	Ignition switched on Apply handbrake Release handbrake	Approx. 0 V approx. battery voltage
8	16 + 3	Warning lamp for alternator	Ignition switched on Start engine	Approx. battery voltage
9[2)]	13 + 20	Glow period indicator lamp	Engine cold (below glow temperature) Switch on ignition	Approx. battery voltage until glow temperature is attained

2) Only for diesel engine and not when engine is hot

Protected by copyright. Copying for private or commercial purposes, in part or in whole, is not permitted unless authorised by Volkswagen AG. Volkswagen AG does not guarantee or accept any liability with respect to the correctness of information in this document. Copyright by Volkswagen AG.

satelettronica

2 Dash panel insert for vehicles 1998 ▸

Fault detection and fault display

The dash panel insert is equipped with self-diagnosis, which makes fault finding easier.

Use -VAS 5051- vehicle diagnostic, testing and information system -V.A.G 1551- for fault finding.

Carry out self-diagnosis of dash panel insert ⇒ Electrical system, self-diagnosis; Rep. Gr. 01 ; Carrying out self-diagnosis of dash panel insert for vehicles 1998 ▸ 09.99; Carrying out self-diagnosis .

2.1 Renewing dash panel insert

Note

If replacing dash panel insert: first read the values for service interval display and odometer before removing the dash panel insert.

– Read service interval display values and distance recorder with vehicle diagnostic, testing and information system -VAS 5051- or fault reader -V.A.G 1551- and note the values ⇒ Electrical system, self-diagnosis; Rep. Gr. 01 ; Self-diagnosis of the dash panel insert for vehicles 1998 ▸ ; Service interval data when renewing dash panel insert .

– Remove old dash panel insert and install new one ⇒ page 43 .

– Adapt the values for the service interval display and for the distance recorder ⇒ Electrical system, self-diagnosis; Rep. Gr. 01 ; Adapting service interval data when changing the dash panel insert for vehicles 1998 ▸ 09.99; Service interval display when renewing dash panel insert .

2.2 Removing and installing dash panel insert

Note

- *To disconnect and reconnect the battery, the procedure described in the workshop manual should be strictly adhered to* *⇒ page 4*.
- *When the battery is reconnected, check the vehicle equipment (radio, clock, window regulators) as per Workshop Manual and/or the Owner's Manual.*
- *If dash panel insert is to be renewed* *⇒ page 43* .
- *The steering wheel must be removed to remove the dash panel insert.*

Removing:

– Disconnect battery ⇒ page 4 .

Protected by copyright. Copyright by Volkswagen AG.
Copyright by Volkswagen AG. Volkswagen AG does not guarantee or accept any liability with respect to the correctness of information in this document. Copyright by Volkswagen AG. Newsletter subscriber is authorised to use this document for personal purposes, in part or in whole, if the copyright notice is included.
satelettronica

Protected by copyright. Copyright by Volkswagen AG. Volkswagen AG does not guarantee or accept any liability with respect to the correctness of information. Copying for private or commercial purposes, in part or in whole, is not permitted unless authorised by Volkswagen AG.

– To remove the lower trim of the steering column switch, remove both cross-head screws -arrows-.
– Removing lower steering column trim
– Remove driver side airbag ⇒ General body repairs, interior; Rep. Gr. 69 .
– Remove steering wheel ⇒ Running gear, axles, steering; Rep. Gr. 48 ; Airbag, steering wheel, steering column .

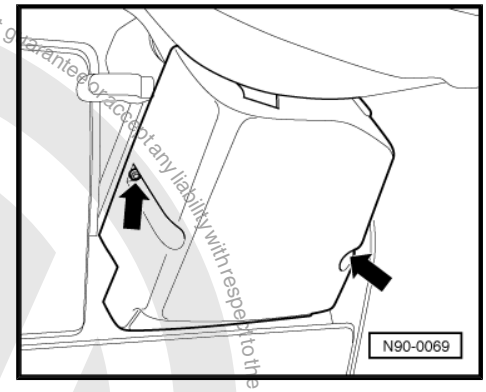

– Pull back foam envelope and disconnect airbag coil connector -arrow-.
– Removing upper steering column trim

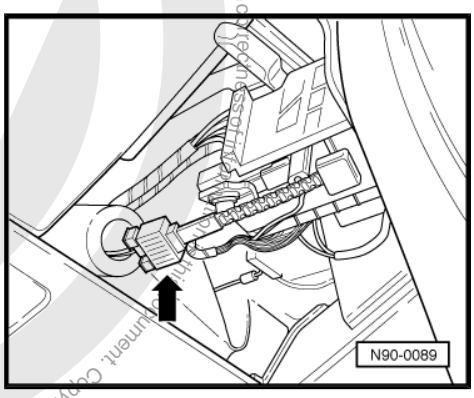

– Disconnect 2 connectors -arrow- from steering column switch for turn signals, main and dipped beam.

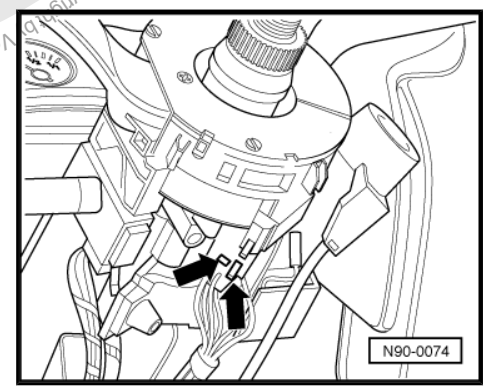

– Remove securing bolts -arrows-.
– Steering column switch for turn signals, main and dipped beam, headlight flasher and parking light
– Release steering wheel height adjustment and secure steering column in lower position.

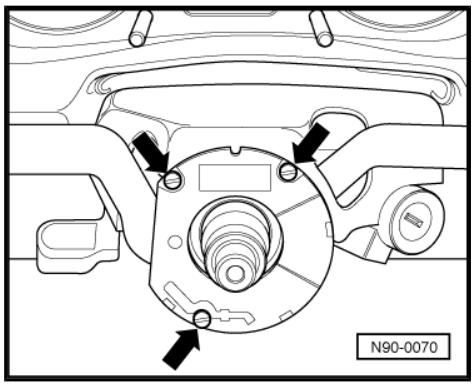

satelettronica

– Remove 4 bolts -arrows-.
– Unscrew trim frame backwards.

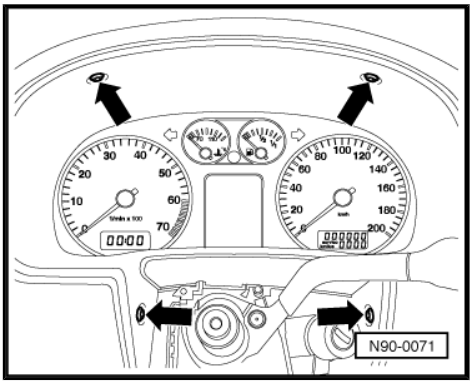

– Remove 2 bolts -arrows-.
– Swing dash panel insert backwards and unclip from lower pivot bearings.
– Release connector and pull off from dash panel insert.
– Take out dash panel insert.

Installing:

Installation is carried out in reverse order of removal.

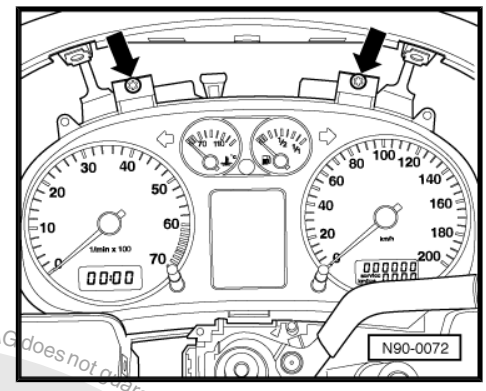

2.3 Dash panel insert, rear view

2.3.1 Dash panel insert (except Polo GTI)

Note

- *The dash panel insert must not be dismantled.*
- *Fault finding programmes for specific systems and current circuits ⇒ Current flow diagrams, Electrical fault finding and Fitting locations*

Protected by copyright. Copying for private or commercial purposes, in part or in whole, is not permitted unless authorised by Volkswagen AG. Volkswagen AG does not guarantee or accept any liability with respect to the correctness of information in this document. Copyright by Volkswagen AG.
satelettronica

1 - Connector -T32- , 32-pin

- ❑ Green
- ❑ Pin assignment ⇒ page 51

2 - Warning buzzer

- ❑ Oil pressure warning
- ❑ Lights switched on warning
- ❑ Seat belt warning (only certain countries)
- ❑ Speed warning (only certain countries)

3 - Bulb with holder (main beam warning lamp K1)

- ❑ 12 V/1.12 W

4 - Connector T32a, 32-pin

- ❑ Blue
- ❑ Pin assignment ⇒ page 50

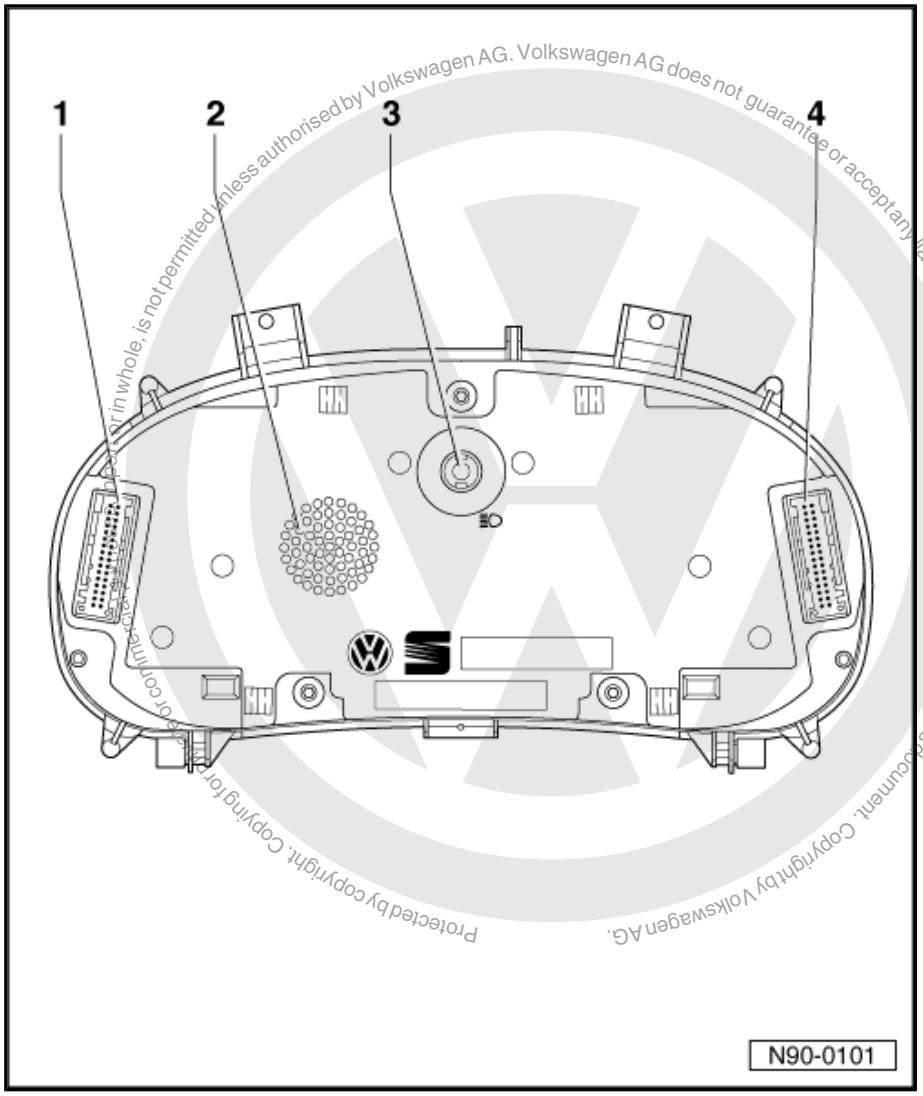

2.3.2 Dash panel insert Polo GTI

Note

- *The dash panel insert must not be dismantled.*
- *Fault finding programmes for specific systems and current circuits ⇒ Current flow diagrams, Electrical fault finding and Fitting locations*

Protected by copyright. Copyright by Volkswagen AG.
Copyright by Volkswagen AG. Volkswagen AG does not guarantee or accept any liability with respect to the correctness of information in this document.
satelettronica

1 - Warning buzzer
- ❑ Oil pressure warning
- ❑ Lights switched on warning
- ❑ Seat belt warning (only certain countries)
- ❑ Speed warning (only certain countries)

2 - Connector T32a, 32-pin
- ❑ Blue
- ❑ Pin assignment ⇒ page 50

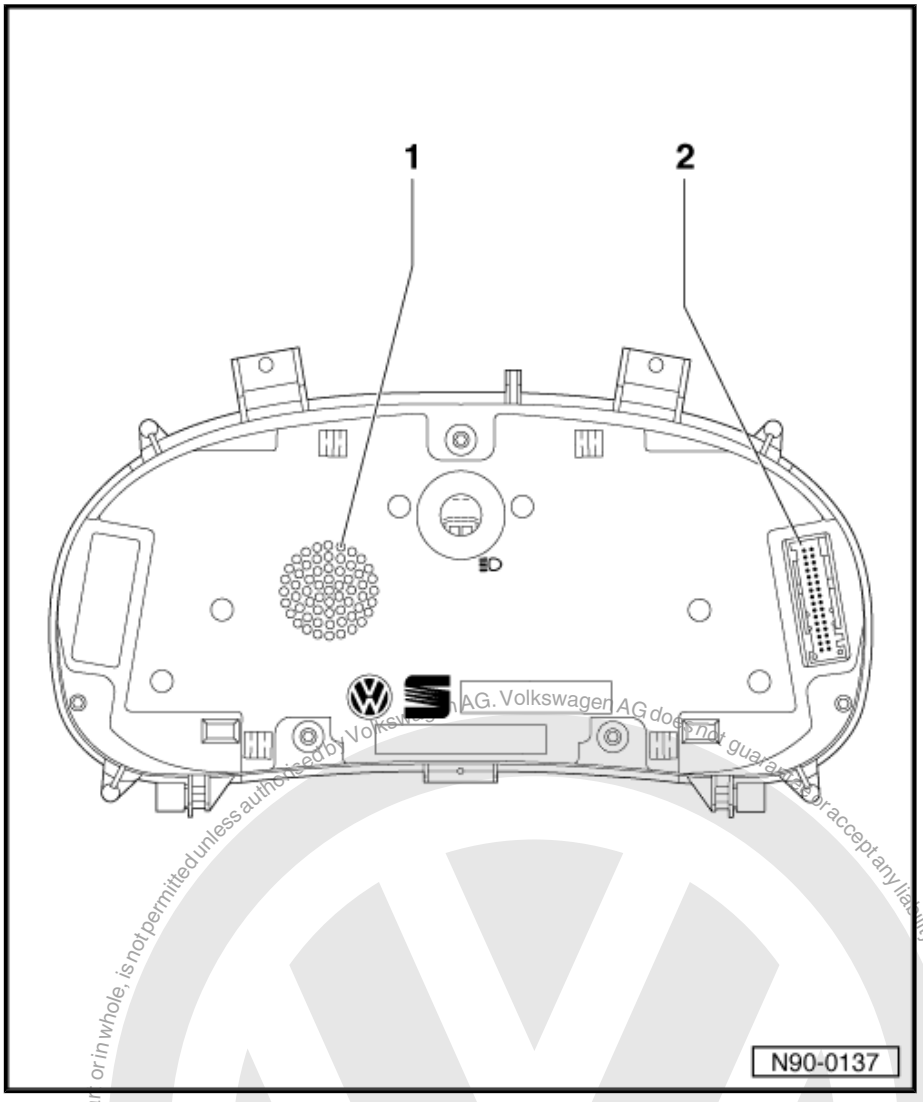

2.4 Warning lamp symbols in dash panel insert

2.4.1 Dash panel insert (except Polo GTI)

Note

The warning lamp arrangement in the dash panel insert is dependent upon the equipment level, engine and country version of the vehicle.

Protected by copyright. Copying for private or commercial purposes, in part or in whole, is not permitted unless authorised by Volkswagen AG. Volkswagen AG does not guarantee or accept any liability with respect to the correctness of information in this document. Copyright by Volkswagen AG.
satelettronica

1 - Left turn signal

2 - Main beam

3 - Right turn signal

4 - Fuel gauge

5 - Brake test / handbrake control and brake system fault warning lamp

6 - Anti-lock brake system (ABS)

7 - Exhaust emissions warning lamp (only Japan)

8 - Exhaust emissions warning lamp

9 - Not fitted

10 - Not fitted

11 - Glow period check

12 - Oil pressure

13 - Alternator

14 - Not fitted

15 - Side lights and dipped beam check (terminal 58)

16 - Airbag

17 - Rear fog light

18 - Coolant

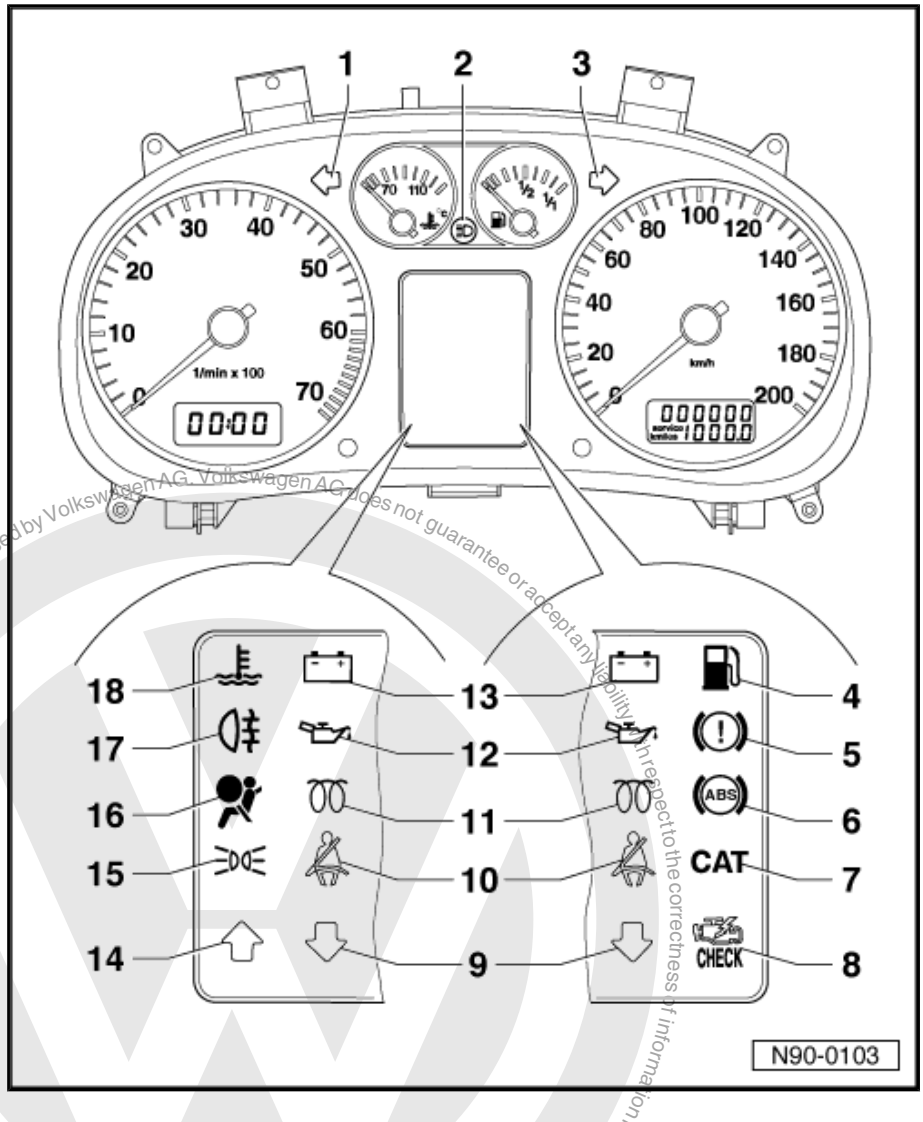

2.4.2 Dash panel insert Polo GTI

Note

Dash panel insert has blue instrument illumination.

Protected by copyright. Copying for private or commercial purposes, in part or in whole, is not permitted unless authorised by Volkswagen AG. Volkswagen AG does not guarantee or accept any liability with respect to the correctness of information in this document. Copyright by Volkswagen AG.
satelettronica

1 - Airbag

2 - Rear fog light

3 - Left turn signal

4 - Main beam

5 - Right turn signal

6 - Anti-lock brake system (ABS)

7 - Brake/handbrake test

8 - Alternator

9 - Fuel gauge

10 - Brake test / brake system fault warning

11 - Oil pressure

12 - Coolant

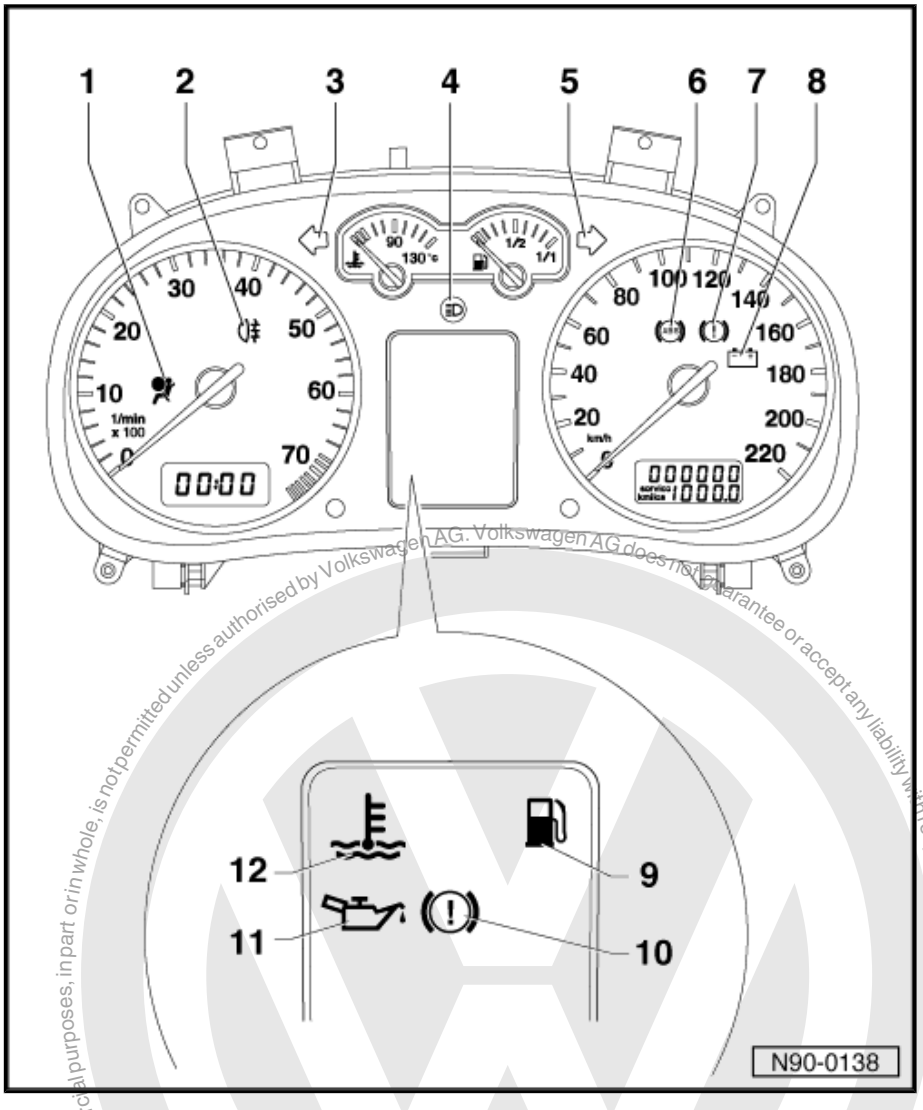

Protected by copyright. Copying for private or commercial purposes, in part or in whole, is not permitted unless authorised by Volkswagen AG. Volkswagen AG does not give a guarantee or accept any liability with respect to the correctness of information in this document. Copyright by Volkswagen AG.
satelettronica

2.5 Pin assignment of connectors on dash panel insert

2.5.1 Connector T32a, 32-pin, blue

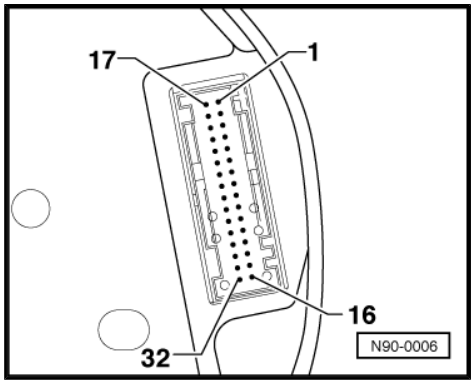

1 - Terminal 15, positive

2 - Right turn signal warning lamp

3 - Electronic speedometer output signal

4 - Not assigned

5 - Fuel gauge

6 - Airbag

7 - Terminal 31, sender earth

8 - Coolant temperature gauge

9 - Terminal 31, earth

10 - Oil pressure switch

11 - Speed signal

12 - Alternator warning lamp, terminal 61

13 - Glow period warning lamp (diesel engines only) or catalytic converter monitor warning lamp (only certain countries)

14 - Warning lamp for rear fog light

15 - Not assigned

16 - Not assigned

17 - Main beam warning lamp, terminal 56a

18 - Left turn signal warning lamp

19 - Anti-lock brake system (ABS)

20 - Dash panel insert illumination, terminal 58d

21 - Driver door open signal

22 - Cooling system low level indicator

23 - Terminal 30, positive

24 - Terminal 31, earth

25 - Self-diagnosis K-wire

26 - Right parking light

27 - Left parking light

28 - Input signal to electronic speedometer

29 - Brake system warning lamp

30 - S-contact

31 - Seat belt warning system (only certain countries)

32 - Warning lamp for side lights (only certain countries) or exhaust emissions warning lamp (only USA)

Protected by copyright. Copying for private or commercial purposes, in part or in whole, is not permitted unless authorised by Volkswagen AG. Volkswagen AG does not guarantee or accept any liability with respect to the correctness of information in this document. Copyright by Volkswagen AG.
satelettronica

2.5.2 Connector -T32- 32-pin, green

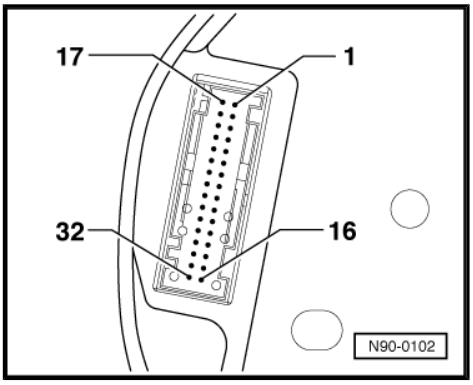

21 - Oil temperature sender

32 - Consumption signal

Note

- *The connector is not available on every dash panel insert! It is dependent upon the equipment level, engine and country version of the vehicle.*
- *All pins not listed are not assigned.*

Protected by copyright. Copying for private or commercial purposes, in part or in whole, is not permitted unless authorised by Volkswagen AG. Volkswagen AG does not guarantee or accept any liability with respect to the correctness of information in this document. Copyright by Volkswagen AG.

satelettronica

3 Dash panel insert for vehicles 10.99 ▸

Fault detection and fault display

The dash panel insert is equipped with self-diagnosis, which makes fault finding easier.

Use -VAS 5051- vehicle diagnostic, testing and information system -V.A.G 1551- for fault finding.

Carry out self-diagnosis of dash panel insert ⇒ Electrical system, self-diagnosis; Rep. Gr. 01 ; Carrying out self-diagnosis of dash panel insert for vehicles 10.99 ▸ 09.99; Carrying out self-diagnosis .

3.1 Renewing dash panel insert

Note

If replacing dash panel insert: first read the values for service interval display and odometer before removing the dash panel insert.

- Read service interval display values and distance recorder with vehicle diagnostic, testing and information system and note the values ⇒ Electrical system, self-diagnosis; Rep. Gr. 01 ; Self-diagnosis of the dash panel insert for vehicles 10.99 ▸; Service interval data when renewing dash panel insert .
- Remove old dash panel insert and install new one ⇒ page 52 .
- Adapt the values for the service interval display and for the distance recorder ⇒ Electrical system, self-diagnosis; Rep. Gr. 01 ; Adapting service interval data when changing the dash panel insert for vehicles 10.99 ▸ 09.99; Service interval display when renewing dash panel insert .

3.2 Removing and installing dash panel insert

Note

- *To disconnect and reconnect the battery, the procedure described in the workshop manual should be strictly adhered to* *⇒ page 4* .
- *When the battery is reconnected, check the vehicle equipment (radio, clock, window regulators) as per Workshop Manual and/or the Owner's Manual.*
- *If dash panel insert is to be renewed* *⇒ page 43* .
- *The steering wheel must be removed to remove the dash panel insert.*

3.2.1 Removing dash panel insert

- Disconnect battery ⇒ page 4 .
- Remove steering wheel ⇒ Running gear, axles, steering; Rep. Gr. 48 ; Airbag, steering wheel, steering column .

satelettronica

– Remove dash panel insert hood.
– Remove bolt -1-.
– Unclip upper part of dash panel insert hood -2- in direction of arrow.

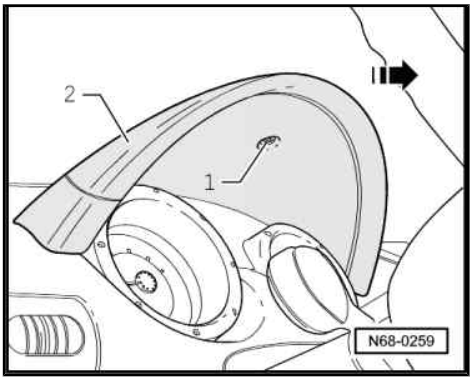

– The 3 screws -arrows- must be removed in order to remove the lower part of the dash panel insert hood -1-.

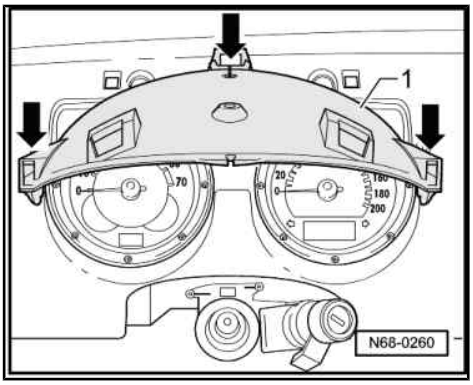

– Now both screws -arrows- securing the dash panel insert can be removed.
– Pull off connectors on dash panel insert.
– Take out dash panel insert.

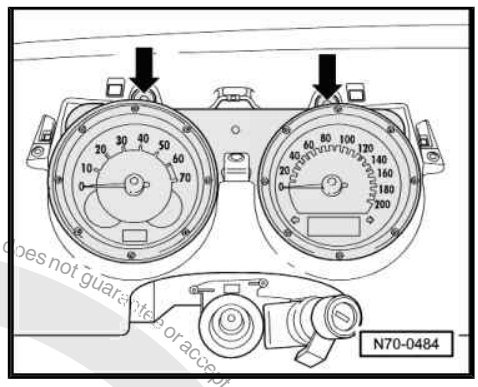

3.2.2 Installing dash panel insert

Installation of dash panel insert is carried out in the reverse sequence.

3.3 Rear view of panel insert for vehicles 10.99 ➤

Note

- *The dash panel insert is equipped with a self-diagnosis which makes fault finding easier.*
- *The dash panel insert must not be dismantled.*
- *Fault finding programmes for specific systems and current circuits ⇒ Current flow diagrams, Electrical fault finding and Fitting locations*

Protected by copyright. Copying for private or commercial purposes, in part or in whole, is not permitted unless authorised by Volkswagen AG. Volkswagen AG does not guarantee or accept any liability with respect to the correctness of information in this document. Copyright by Volkswagen AG.
satelettronica

1 - Connector, 32-pin
- ❑ Blue
- ❑ Pin assignment ⇒ page 59

2 - Warning buzzer
- ❑ Oil pressure warning
- ❑ Lights switched on warning
- ❑ Seat belt warning (only certain countries)
- ❑ Speed warning (only certain countries)

3 - Connector, 32-pin
- ❑ Green
- ❑ Pin assignment ⇒ page 59

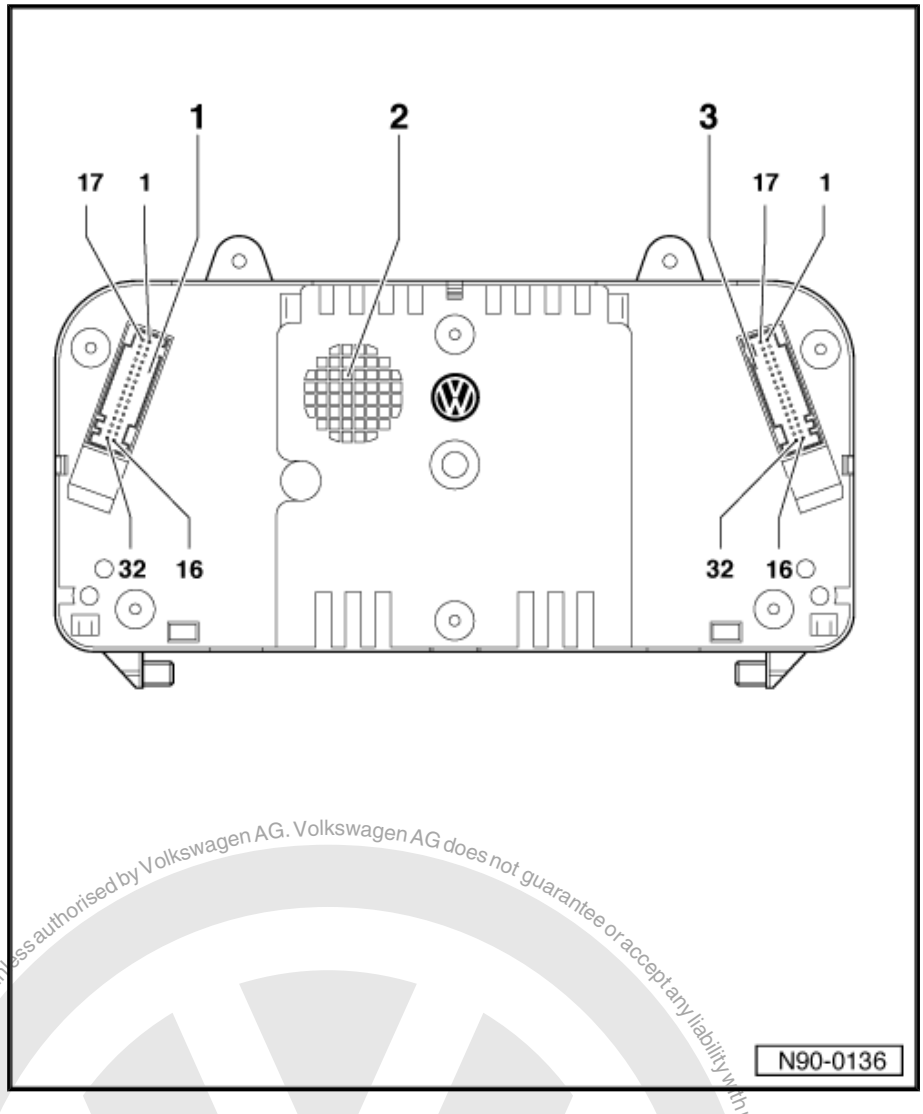

3.4 Warning lamp symbols in dash panel insert

3.4.1 Dash panel insert (except Polo GTI)

Note

The warning lamp arrangement in the dash panel insert is dependent upon the equipment level, engine and country version of the vehicle.

Protected by copyright. Copying for private or commercial purposes, in part or in whole, is not permitted unless authorised by Volkswagen AG. Volkswagen AG does not guarantee or accept any liability with respect to the correctness of information in this document. Copyright by Volkswagen AG.
satelettronica

1 - For fuel reserve

2 - For seat belt

3 - For alternator charge control

4 - Oil/oil pressure

5 - For rear fog light

6 - For coolant temperature

7 - For main beam

8 - For exhaust emissions warning lamp

9 - For pre-glow control

10 - For rear lid open

11 - For brake test / brake system fault warning

12 - For ABS

13 - For Airbag

14 - Gear change up display

15 - For right turn signal warning lamp

16 - For ESP

17 - For left turn signal warning lamp

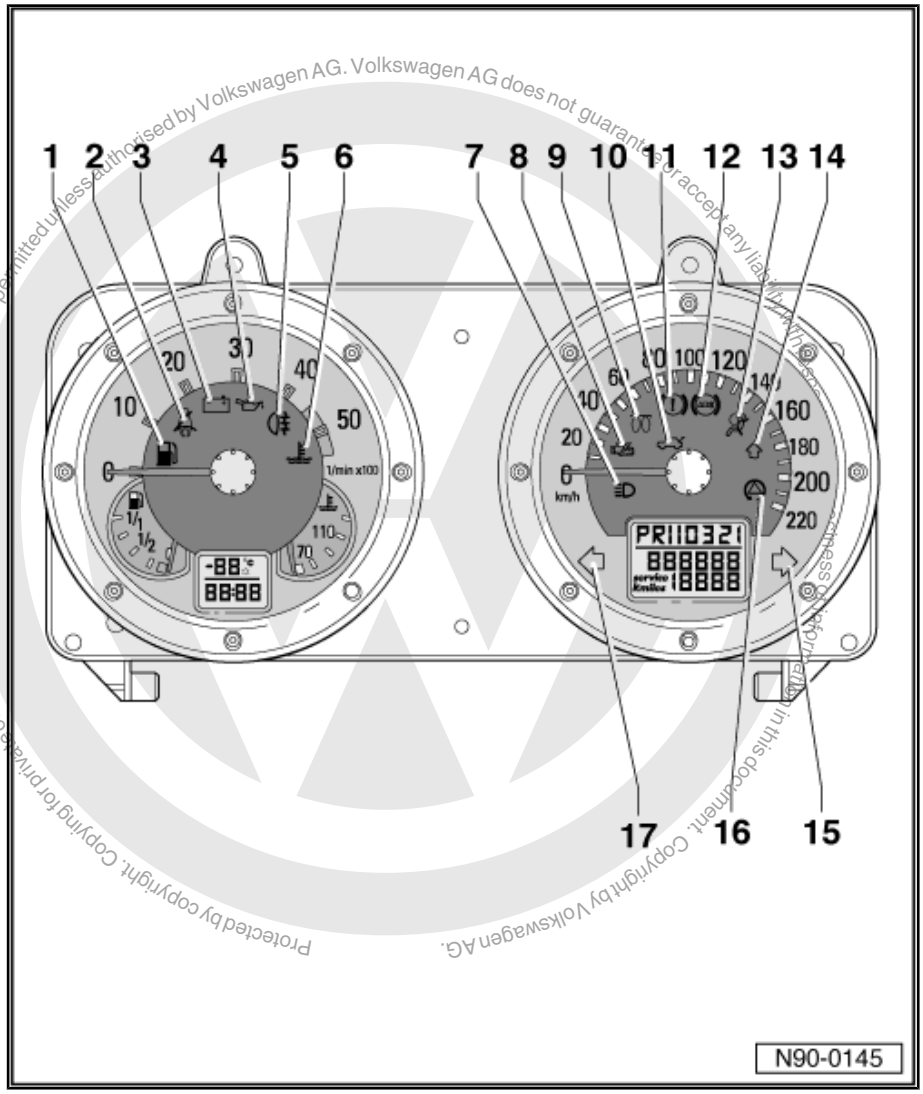

Protected by copyright. Copying for private or commercial purposes, in part or in whole, is not permitted unless authorised by Volkswagen AG. Volkswagen AG does not guarantee or accept any liability with respect to the correctness of information in this document. Copyright by Volkswagen AG.

3.4.2 Dash panel insert Polo GTI

Note

The warning lamp arrangement in the dash panel insert is dependent upon the equipment level, engine and country version of the vehicle.

satelettronica

Protected by copyright. Copyright by Volkswagen AG. Volkswagen AG does not guarantee or accept any liability with respect to the correctness, completeness, and topicality of the information contained in this document. Copyright by Volkswagen AG.

1 - For fuel reserve

2 - For seat belt

3 - For alternator charge control

4 - Oil/oil pressure

5 - For rear fog light

6 - For coolant temperature

7 - For main beam

8 - For exhaust emissions warning lamp

9 - For electronic power control

10 - For rear lid open

11 - For brake test / brake system fault warning

12 - For ABS

13 - For Airbag

14 - Gear change up display

15 - For ESP

16 - For left turn signal warning lamp

17 - For right turn signal warning lamp

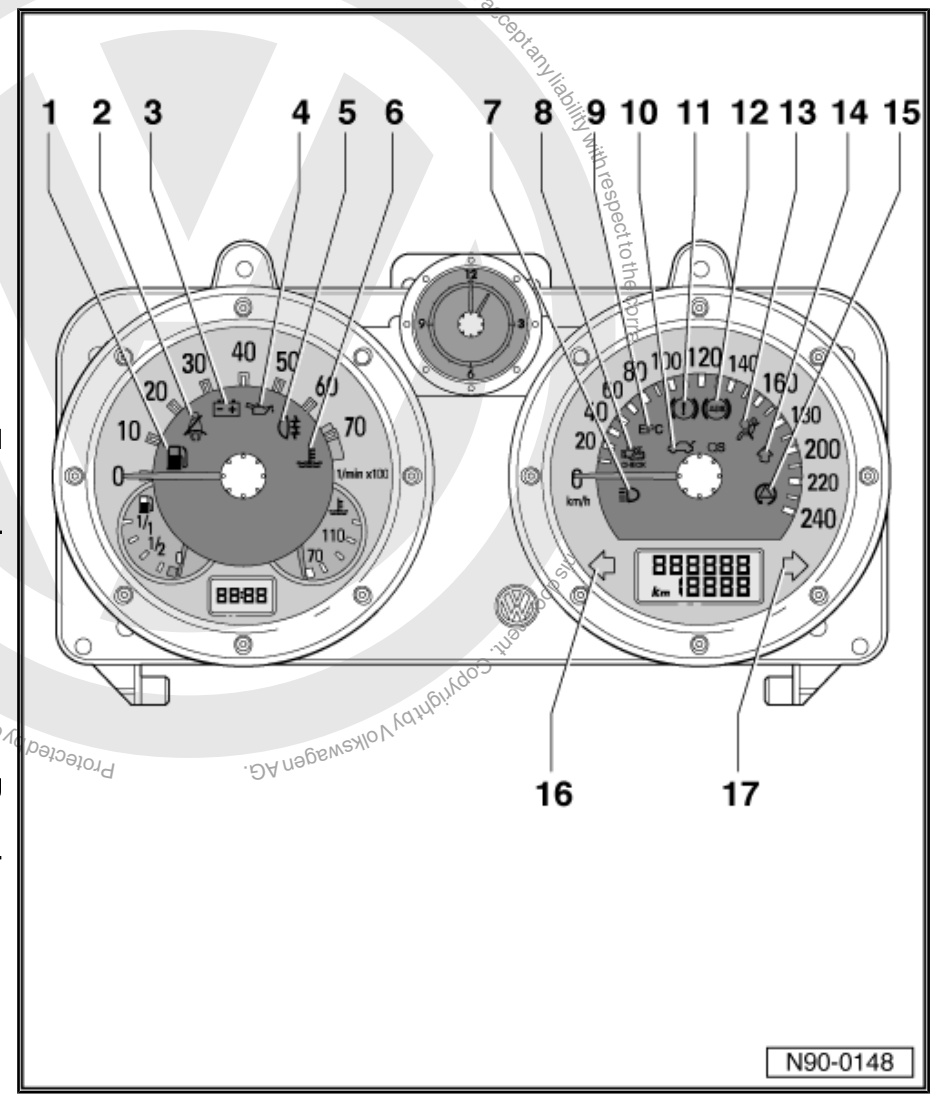

satelettronica

3.5 Description of instruments

3.5.1 Instruments (except Polo GTI)

1 - Fuel gauge

2 - Clock switch (hour set)

3 - Ambient temperature display

4 - Clock display unit

5 - Cooling system temperature display

6 - Clock switch (minute set)

7 - Engine speed

8 - Vehicle speed display

9 - Gear selected display

10 - Odometer

11 - Daily trip recorder switch (reset)

12 - Short distance odometer

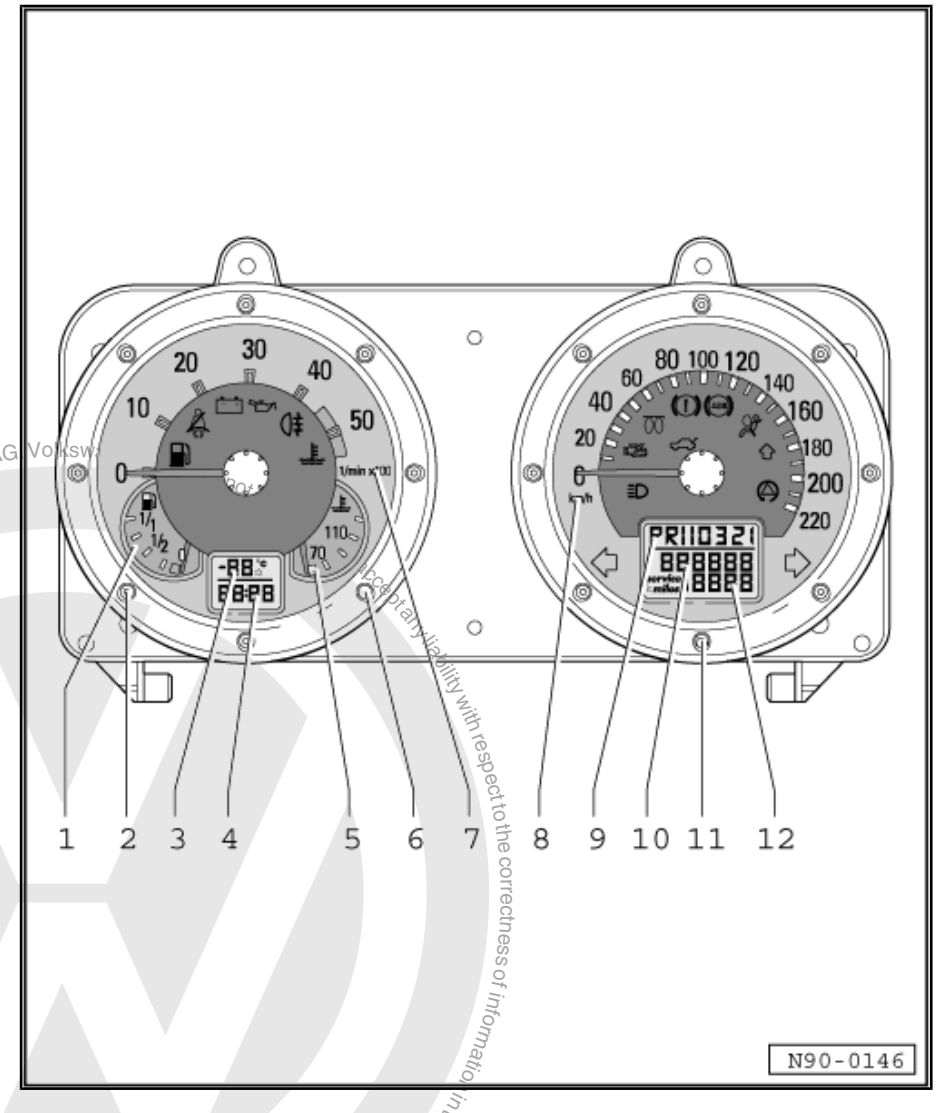

Protected by copyright. Copying for private or commercial purposes, in part or in whole, is not permitted unless authorised by Volkswagen AG. Volkswagen AG does not take any liability with respect to the correctness of information in this document. Copyright by Volkswagen AG.
satelettronica

3.5.2 Instruments (only Polo GTI)

1 - Fuel gauge

2 - Ambient temperature display

3 - Cooling system temperature display

4 - Engine speed

5 - Clock setting button (backwards)

6 - Clock display unit

7 - Clock setting button (forwards)

8 - Daily trip recorder switch (reset)

9 - Odometer

10 - Short distance odometer

11 - Vehicle speed display

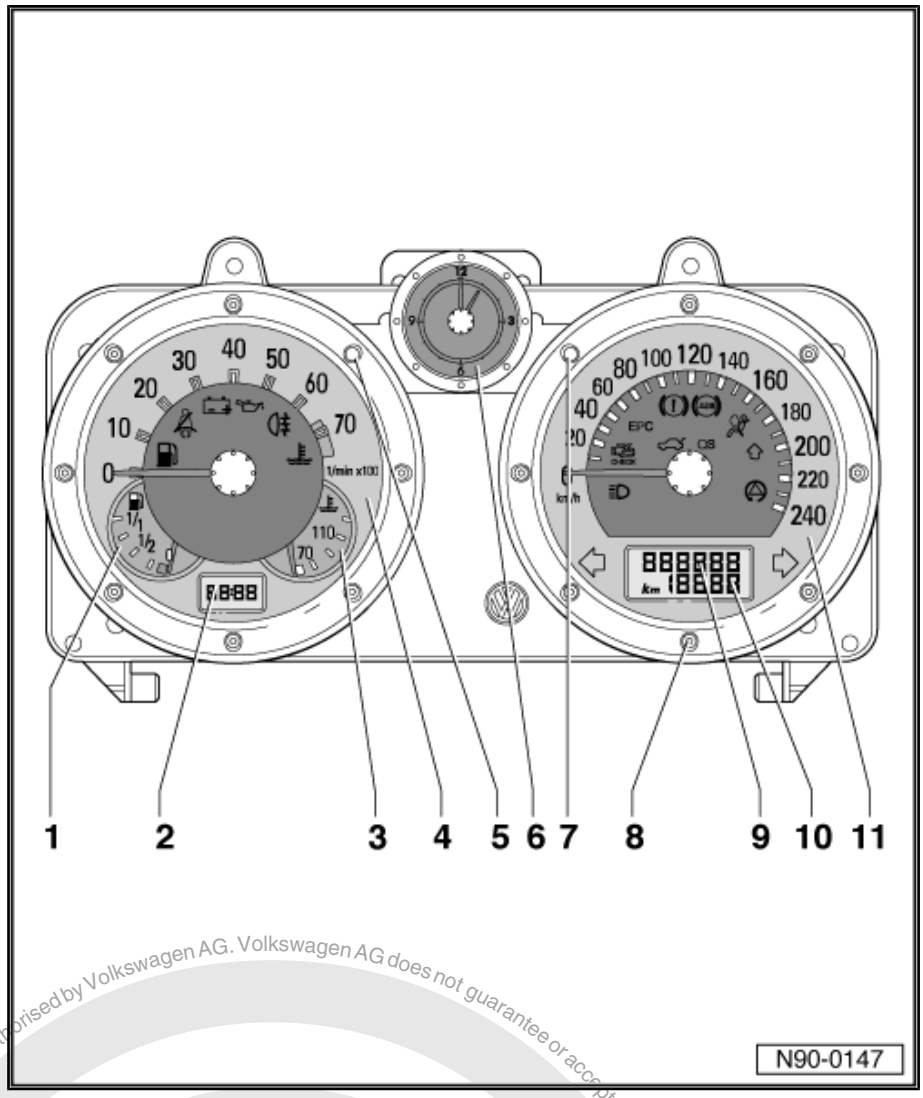

satelettronica
Protected by copyright. Copying for private or commercial purposes, in part or in whole, is not permitted unless authorised by Volkswagen AG. Volkswagen AG does not guarantee or accept any liability with respect to the correctness of information in this document. Copyright by Volkswagen AG.

3.6 Pin assignment of connectors on dash panel insert

3.6.1 Connector T32a, 32-pin, blue

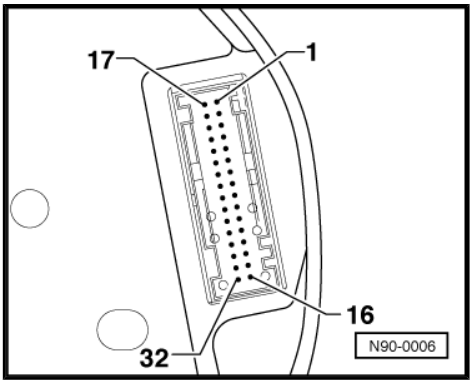

1 - Terminal 15, positive

2 - Right turn signal warning lamp

3 - Electronic speedometer output signal

4 - Not assigned

5 - Fuel gauge

6 - Airbag

7 - Terminal 31, sender earth

8 - Coolant temperature gauge

9 - Terminal 31, earth

10 - Oil pressure switch

11 - Speed signal

12 - Alternator warning lamp, terminal 61

13 - Glow period warning lamp (diesel engines only) or catalytic converter monitor warning lamp (only certain countries)

14 - Warning lamp for rear fog light

15 - Oil pressure switch (0.25 hpa)

16 - Rear lid open warning lamp

17 - Main beam warning lamp, terminal 56a

18 - Left turn signal warning lamp

19 - Anti-lock brake system (ABS)

20 - Dash panel insert illumination, terminal 58d

21 - Driver door open signal

22 - Cooling system low level indicator

23 - Terminal 30, positive

24 - Terminal 31, earth

25 - Self-diagnosis K-wire

26 - Right parking light

27 - Left parking light

28 - Input signal to electronic speedometer

29 - Brake system warning lamp

30 - S-contact

31 - Seat belt warning system (only certain countries)

32 - Warning lamp for side lights (only certain countries) or exhaust emissions warning lamp (only USA)

Protected by Copyright. Copying for private or commercial purposes, in part or in whole, is not permitted unless authorised by Volkswagen AG. Volkswagen AG does not guarantee or accept any liability with respect to the correctness of information in this document. Copyright by Volkswagen AG.
satelettronica

3.6.2 Connector -T32- 32-pin, green

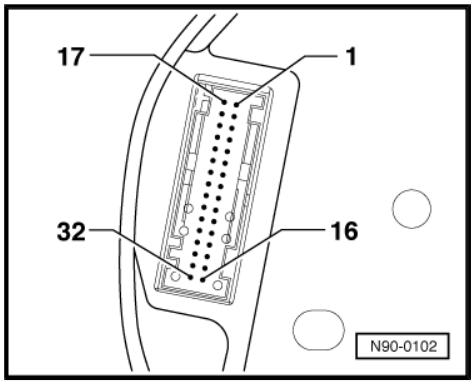

10 - Tank warning (USA only)

12 - Bi-directional wire (air conditioner)

19 - CAN high (input)

20 - CAN low (input)

21 - Oil temperature sender

26 - Ambient temperature

27 - CAN high (output)

28 - CAN low (output)

32 - Consumption signal

Note

All pins not listed are not assigned.

Protected by copyright. Copyright for private or commercial purposes, in part or in whole, is not permitted unless authorised by Volkswagen AG. Volkswagen AG does not guarantee or accept any liability with respect to the correctness of information in this document. Copyright by Volkswagen AG.

satelettronica

4 Service interval display

4.1 Resetting service interval display

⇒ Maintenance ; Booklet 28 ; Descriptions of work:

Protected by copyright. Copying for private or commercial purposes, in part or in whole, is not permitted unless authorised by Volkswagen AG. Volkswagen AG does not guarantee or accept any liability with respect to the correctness of information in this document. Copyright by Volkswagen AG.

satelettronica

92 – Windscreen wash/wipe system

1 Windscreen wiper system

Note

- *To disconnect and reconnect the battery, the procedure described in the workshop manual should be strictly adhered to* ⇒ page 4 .
- *If the vehicle has a radio with anti-theft coding, obtain code before disconnecting battery.*
- *When the battery is reconnected, check operation of vehicle electrical equipment (radio, clock and electric windows etc.) according to Workshop Manual or Owner's Manual.*

1.1 Removing and installing windscreen wiper system, vehicles ▸ 09.99

1 - Rubber ring

2 - Washer

3 - Hexagon bolt M6
- ❑ 5 Nm

4 - Wiper blade rubber
- ❑ Removing and installing wiper rubber blade ⇒ page 68

5 - Wiper blade
- ❑ Adjusting park position ⇒ page 63

6 - Wiper arm

7 - Cover cap

8 - M8 hexagon nut
- ❑ 20 Nm

9 - Washer

10 - Snap ring

11 - Washer

12 - O-ring

13 - Spring washer

14 - Spring washer

15 - Toggle lever

16 - Connecting rods

17 - Wiper motor
- ❑ Removing wiper frame

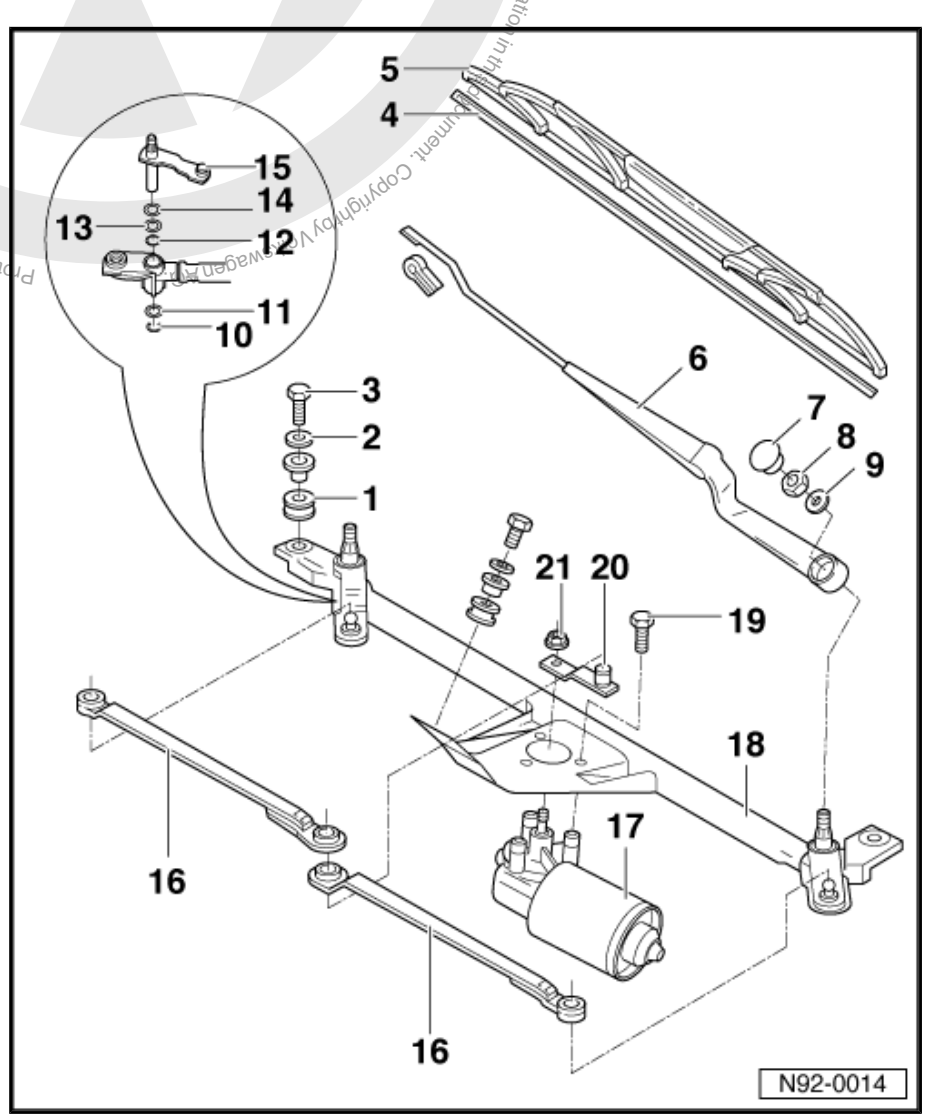

satelettronica

beforehand

18 - Wiper frame

19 - Hexagon bolt M6

20 - Crank

❑ Setting park position ⇒ page 63

21 - M8 hexagon nut

❑ 20 Nm

Setting park position

– Run wiper motor to park position and install.

– First press connecting rod -2- onto loose crank -3- and then press on connecting rod -1-.

– Align connecting rods -1- and -2- to centre line shown in illustration.

– Tighten nut on crank -3-.

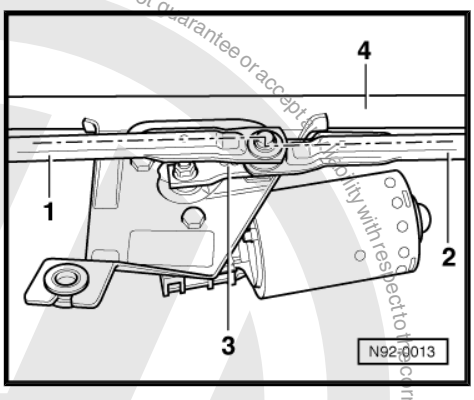

Adjusting wiper blade park position

– Set wiper blades at markings in windscreen.

a = Marking for left-hand drive vehicles

b = Marking for right-hand drive vehicles

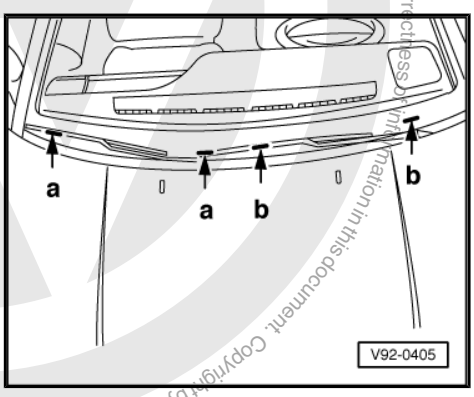

1.2 Removing and installing window wiper system, vehicles 10.99 ▸

Special tools and workshop equipment required

♦ Torque wrench -V.A.G 1331-

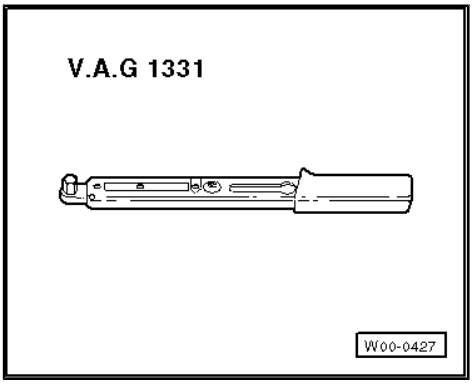

satelettronica

♦ Release lever -80-200-

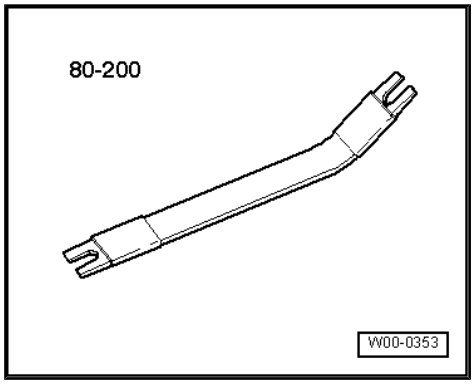

♦ Puller -T10369-

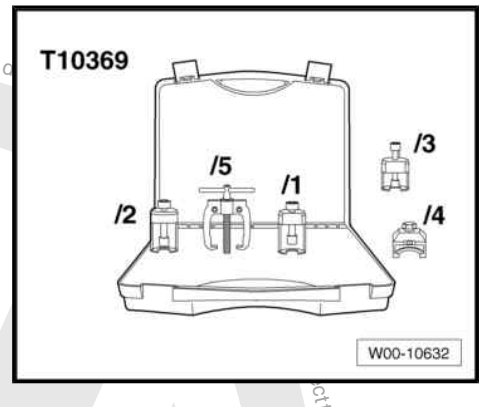

1.2.1 Removing wiper arms

Note

Before removing the wiper arms check that the wiper motor is in park position. Only then can the wiper arm park position be correctly set when installing.

– Disconnect battery ⇒ page 4 .

– Lever off black cover caps -arrows- with a screwdriver.

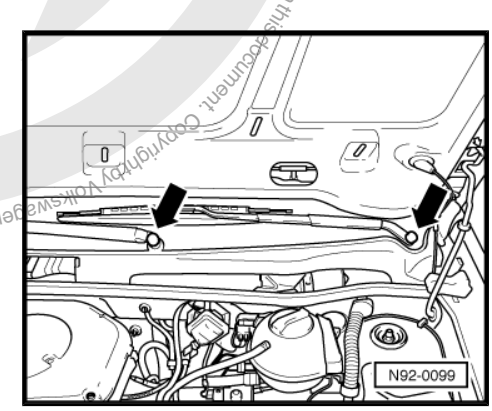

Protected by copyright. Copying for private or commercial purposes, in part or in whole, is not permitted unless authorised by Volkswagen AG. Volkswagen AG does not make any representation or warranty regarding the accuracy or completeness of the information in this document. Copyright by Volkswagen AG.
satelettronica

– Loosen M8 hexagon nuts -arrows-, but do not remove completely.

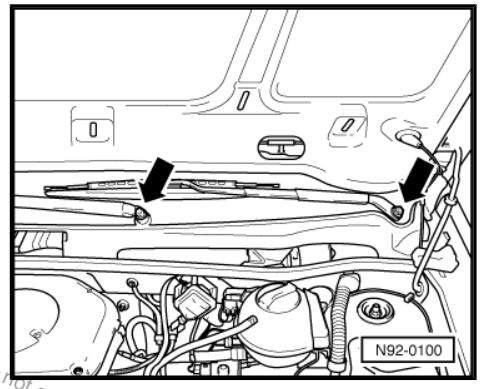

– Slide legs of puller -T10369/1- -2- under wiper arm -4- as shown in the illustration.
– Turn thrust bolt -1- of puller clockwise until it comes into contact with the wiper shaft. The hexagon nut -3- previously loosened on the windscreen wiper arm serves as a means of centring and guiding the thrust bolt -1-.
– Turn thrust bolt -1- of puller clockwise using a 6 mm Allen key until wiper arm -4- is loosened from the shaft profile.

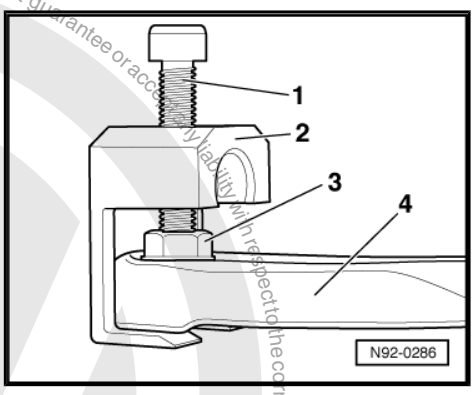

1.2.2 Removing plenum chamber cover

Note

The plenum chamber cover is divided in 2 parts. To remove the wiper frame with linkage and wiper motor, it is only necessary to remove the left side of the plenum chamber cover.

– Detach rubber strip -1- from left part till centre of vehicle.
– Fold rubber strip -2- in clip area -arrows- slightly upwards and remove clips.
– Carefully lever out plenum chamber cover upwards.

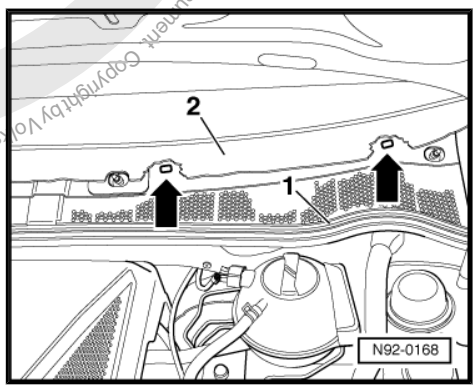

Protected by copyright. Copyright by Volkswagen AG. Volkswagen AG does not guarantee or accept any liability with respect to the correctness of information in this document. Copyright by Volkswagen AG. Reproduction, in whole or in part, for commercial purposes, in part or in whole, is not permitted without the express authorised by Volkswagen AG.
satelettronica

1.2.3 Removing wiper frame with linkage and wiper motor

– Remove M6 hexagon bolts -arrows- and take off washers.
– Pull connector off wiper motor.
– Now take out wiper frame complete.

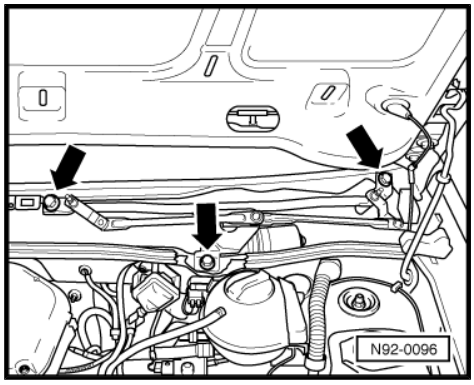

1.2.4 Removing wiper motor from wiper frame

– Lever rods -1- off crank -3- using removal lever 80-200.
– Remove M8 hexagon nut -4-.
– Remove crank -3-.
– Remove 3 M6 securing bolts -2- for wiper motor.

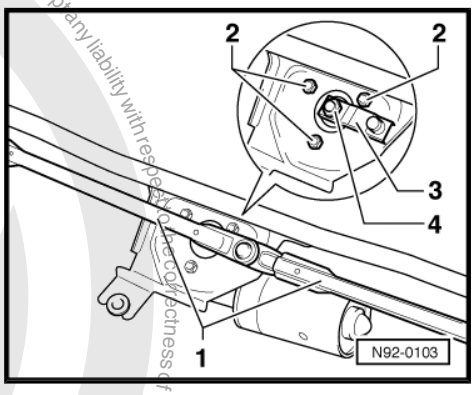

1.2.5 Installing wiper motor in wiper frame

– Connecting battery ⇒ page 4 .
– Run motor to park position by connecting connector and operating wiper switch briefly.
– Disconnect battery ⇒ page 4 .
– Disconnect connector again and secure motor by tightening M6 securing bolts -2-. Specified torque: 5 Nm

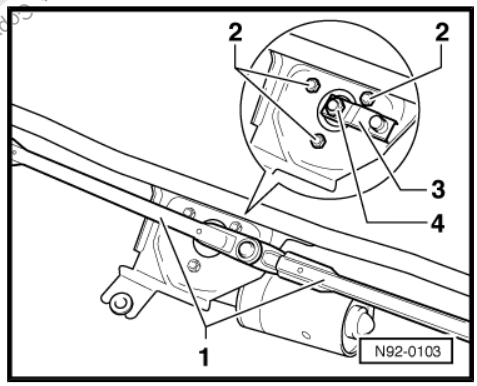

1.2.6 Setting park position

– Run wiper motor to park position and install.

Protected by copyright. Copyright by Volkswagen AG.
Copying for private or commercial purposes, in part or in whole, is not permitted unless authorised by Volkswagen AG. Volkswagen AG does not guarantee or accept any liability with respect to the correctness of information in this document.
satelettronica

– First press connecting rod -2- onto loose crank -3- and then press on connecting rod -1-.
– Align connecting rods -1- and -2- to centre line shown in illustration.
– Tighten nut on crank -3-.

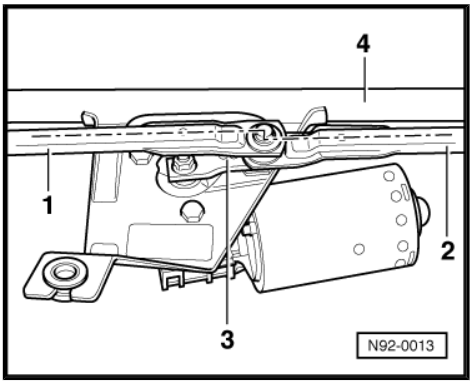

1.2.7 Installing wiper frame with linkage and wiper motor

– Insert wiper frame with wiper motor.
– Attach connector to wiper motor.
– Fit washers and tighten M6 hexagon bolts -arrows-.

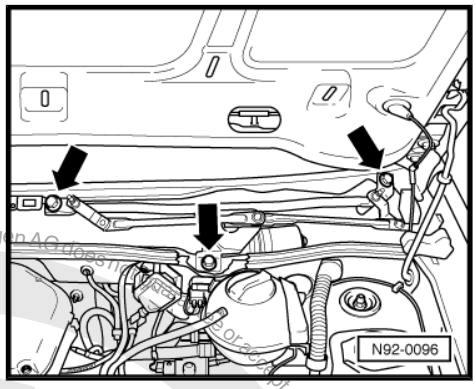

1.2.8 Installing plenum chamber cover

– Install plenum chamber cover.

Note

Left part of plenum chamber cover must be pushed under right part of plenum chamber cover.

– Insert clips -arrows- and fit rubber strip -arrows-.

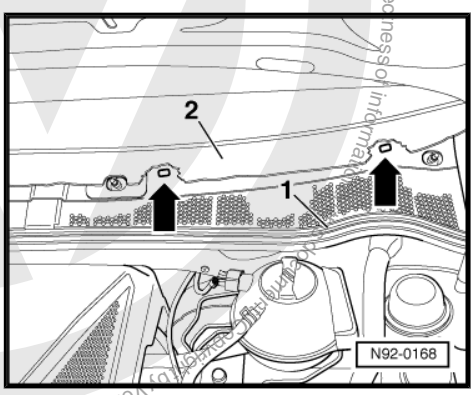

1.2.9 Installing wiper arms

– Fit wiper arms.
– Adjust wiper blade park position ⇒ page 68 .

Protected by copyright. Copying for private or commercial purposes, in part or in whole, is not permitted unless authorised by Volkswagen AG. Volkswagen AG does not guarantee or accept any liability with respect to the correctness of information. Copyright by Volkswagen AG.
satelettronica

– Tighten M8 hexagon nuts -arrows-.

Wiper arm torque setting: 20 Nm

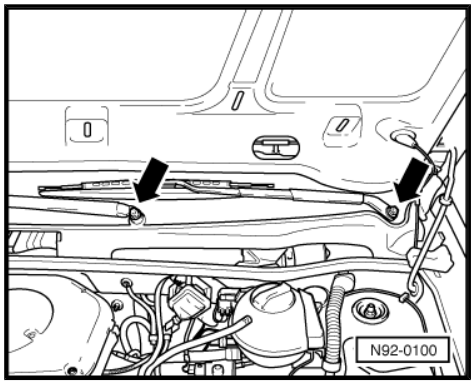

– Fit black cover caps -arrows-.

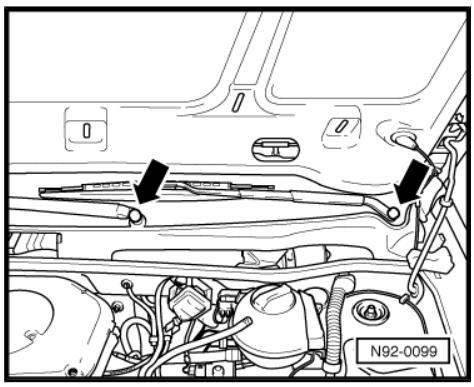

1.2.10 Adjusting wiper blade park position

– Set wiper blades at markings in windscreen.

a = Marking for left-hand drive vehicles

b = Marking for right-hand drive vehicles

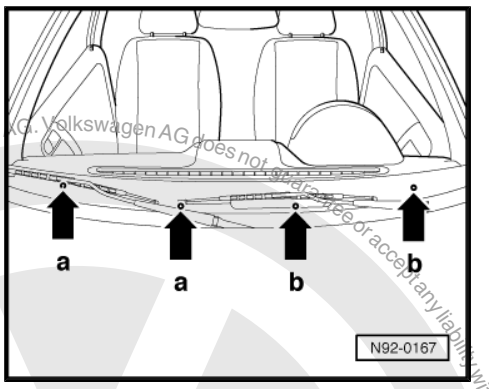

1.3 Removing and installing wiper rubber

– Using a pair of pliers, press together both steel strips on the enclosed side of the wiper rubber, slide sideways out of the upper clip and remove rubber complete with strips from the other clips of the wiper blades.

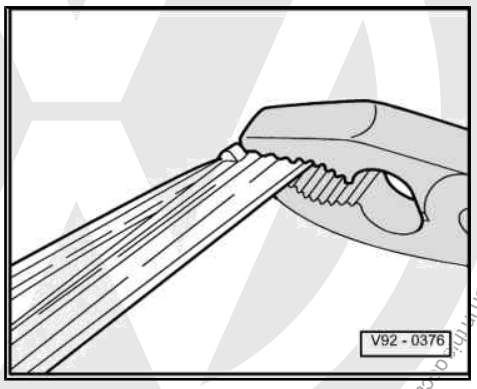

Protected by copyright. Copying for private or commercial purposes, in part or whole is not permitted unless authorised by Volkswagen AG. Volkswagen AG does not warrant, guarantee or accept any liability with respect to the correctness of information in this document. Copyright by Volkswagen AG.
satelettronica

– Fit new rubber insert into lower clips of wiper blade.
– Guide both strips into the first groove of the rubber insert so that the recesses in the strips face the rubber and engage in the rubber lugs of the groove.
– Using pliers, press both steel strips and rubber together and insert into the upper clips so that the lugs of the clips on both sides engage in the retaining slots -arrow- of the wiper blade rubber insert.

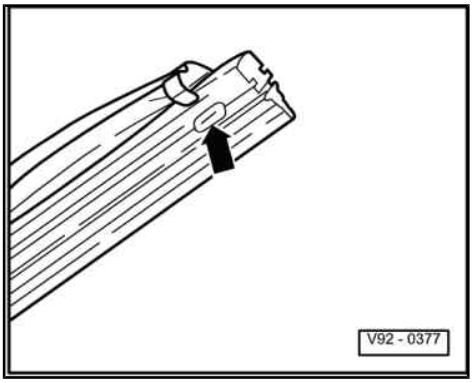

Protected by copyright. Copying for private or commercial purposes, in part or in whole, is not permitted unless authorised by Volkswagen AG. Volkswagen AG does not guarantee or accept any liability with respect to the correctness of information in this document. Copyright by Volkswagen AG.
satelettronica

Protected by copyright. Copying for private or commercial purposes, in part or in whole, is not permitted unless authorised by Volkswagen AG. Volkswagen AG does not guarantee or accept any liability with respect to the correctness of information in this document. Copyright by Volkswagen AG.

2 Window washer system

2.1 Assembly overview of window washer system, vehicles ▸ 09.99

1 - Spray jets
- ❑ Adjusting ⇒ page 71

2 - Hose

3 - Electric wiring for heated spray jets

4 - Junction

5 - Bushing

6 - Reservoir cap

7 - Reservoir
- ❑ Capacity 2.5 litres

8 - Washer pump

9 - Hose to rear window wipe/ wash system

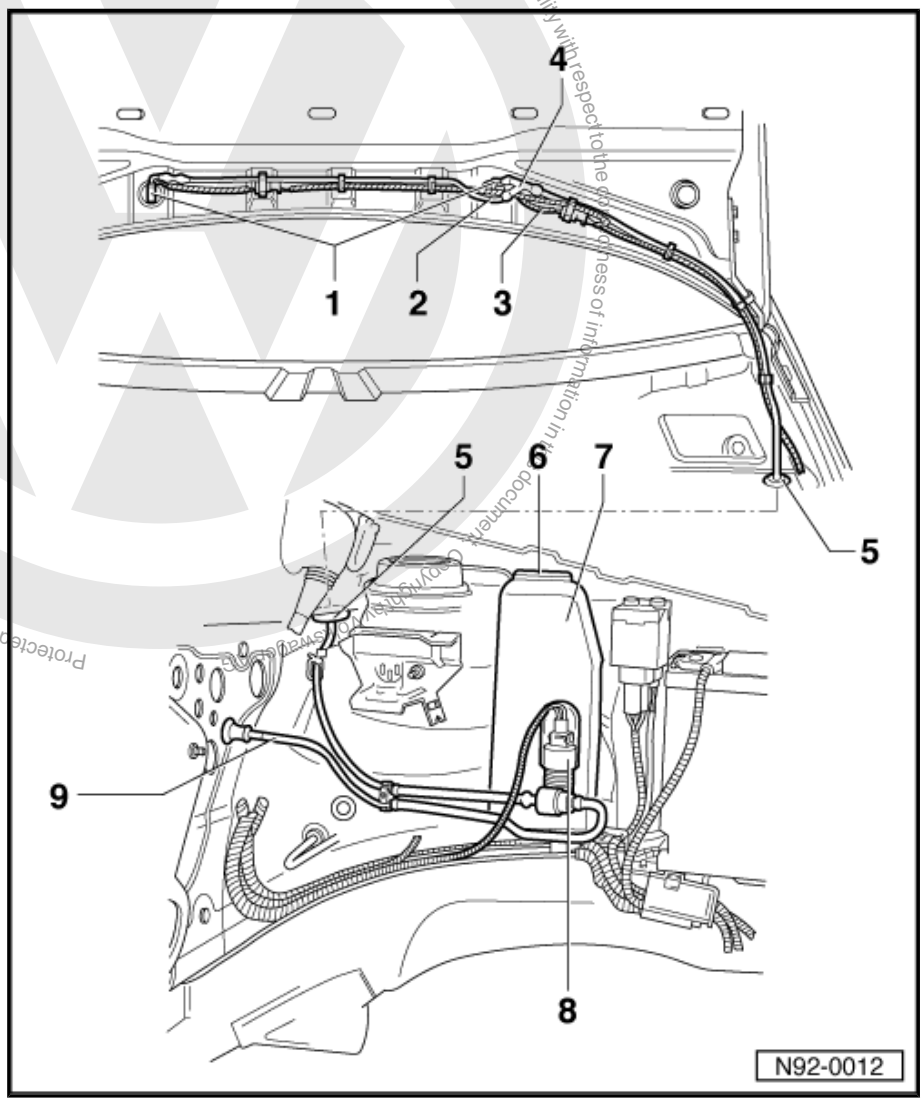

satelettronica

2.2 Assembly overview of window washer system, vehicles 10.99 ▸

1 - Spray jet
- ❑ Not adjustable
- ❑ Renewing ⇒ page 73

2 - Angled piece

3 - Hose

4 - Noise insulation

5 - Electric wiring for heated spray jets

6 - Spray jet
- ❑ Not adjustable
- ❑ Renewing ⇒ page 73

7 - Angled piece

8 - Electric wiring for heated spray jets

9 - Hose grommet

10 - Reservoir
- ❑ Removing ⇒ page 73

11 - Hose to rear window wipe/ wash system

12 - Washer pump

13 - Reservoir cap

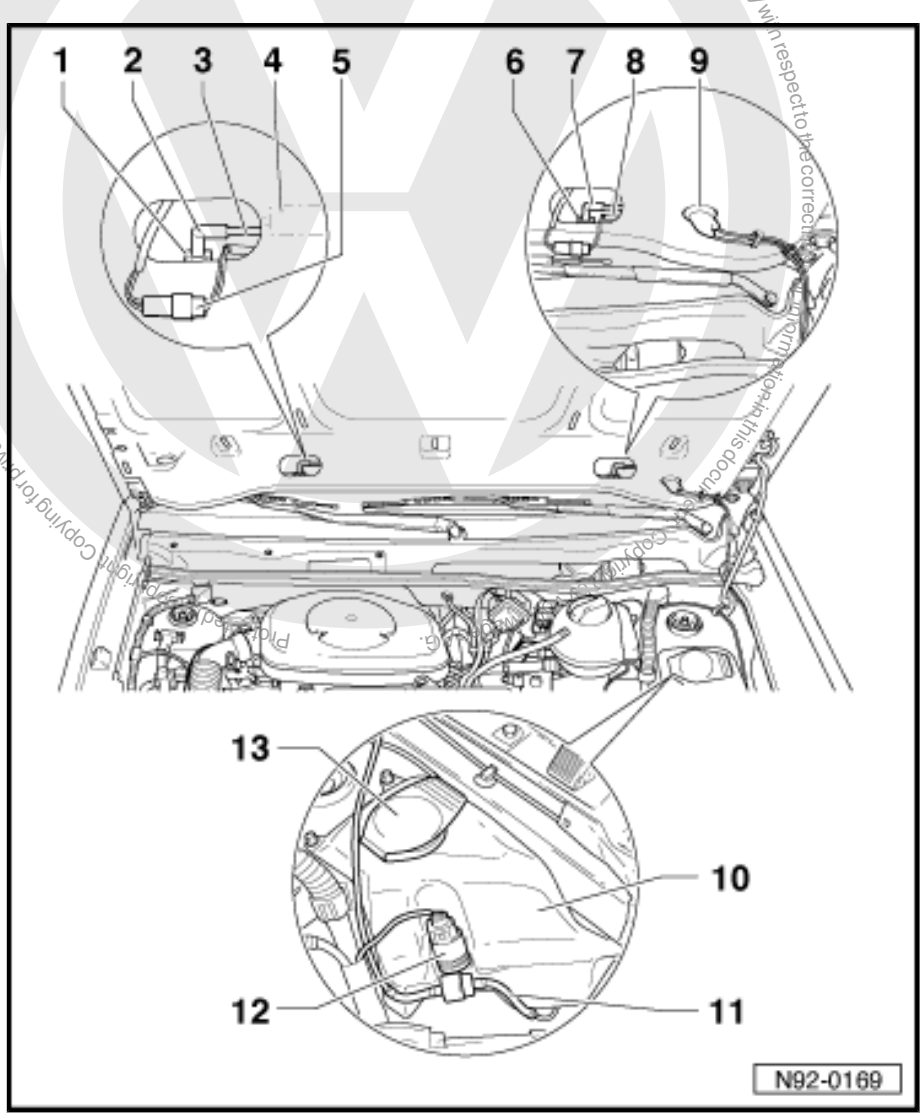

2.3 Adjusting windscreen washer system spray jets

Note

- *Renew spray jet if spray is irregular or cannot be adjusted to the prescribed setting.*
- *Never use a needle or similar object, as otherwise water passages in washer spray jets will be damaged!*

2.3.1 Spray jets without preadjustment

Special tools and workshop equipment required

satelettronica

♦ Adjusting tool -T10127-

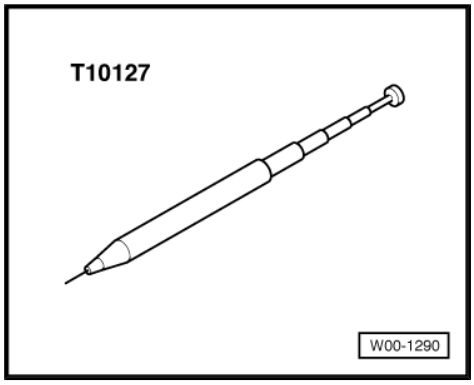

– Check jet settings and adjust spray jets if necessary using spray jet adjusting tool 3125 A.

a	280 mm	e	370 mm
b	290 mm	f	270 mm
c	430 mm	g	290 mm
d	560 mm	h	560 mm

Tolerance: ± 20 mm

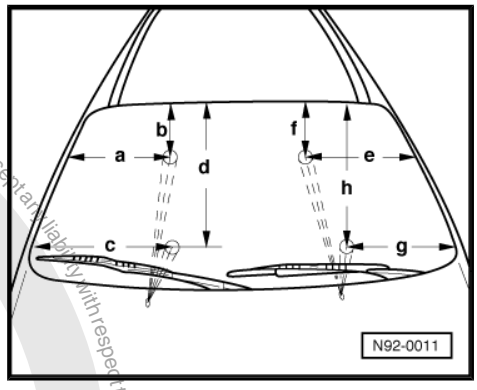

2.3.2 Preadjusted spray jets (fan jet)

The spray jets are preset. However, small differences in height may be corrected.

Note

The spray jets must not be cleaned opposite to the direction of flow or blown through from the front.

If both spray fields are not at same height, adjust spray direction upwards or downwards as follows:

Note

Two different types of spray jets are available.

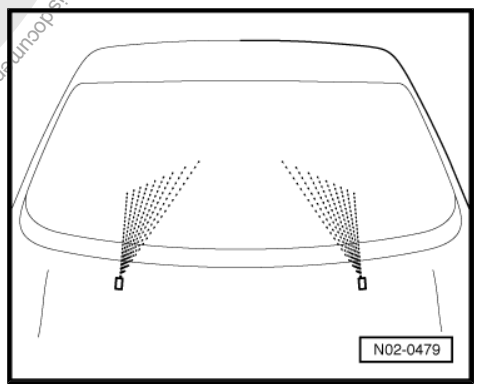

Reproduced by copyright. Copyright by Volkswagen AG. Copying for commercial purposes in part or in whole, is not permitted unless authorised by Volkswagen AG. Volkswagen AG does not guarantee or accept any liability with respect to the correctness of information in this document.
satelettronica

– Turn eccentric on spray jet with a screwdriver in direction of arrow to adjust spray upwards.

– To adjust eccentric downwards, turn eccentric on spray jet in opposite direction of arrow.

Or

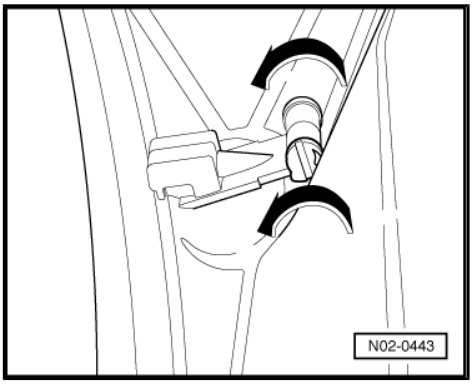

– Adjust spray by moving adjuster -1- by hand upwards or downwards.

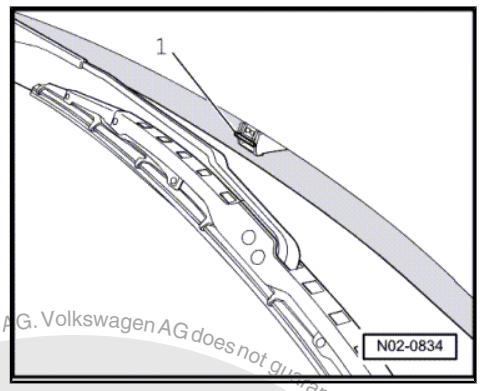

2.4 Renewing windscreen washer system spray jets, vehicles 10.99 ▸

– Pull hose -1- off spray jet and, if necessary, disconnect 2-pin connector.

– Unclip spray jet -arrow- and remove.

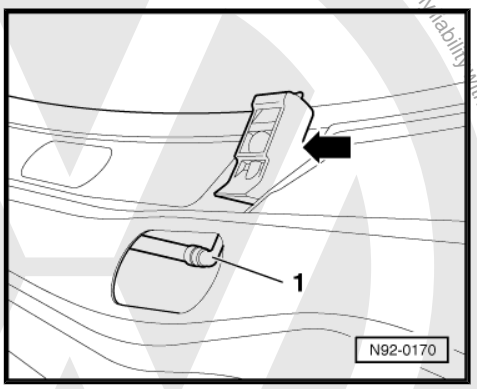

2.5 Removing washer fluid reservoir, vehicles 10.99 ▸

– Removing battery ⇒ page 7

– Pull hose -1- to front spray jets and hose -2- to rear window washer system off pump.

– Pull connector off washer pump.

– Remove plastic nuts -arrows-.

– Take reservoir carefully out upwards.

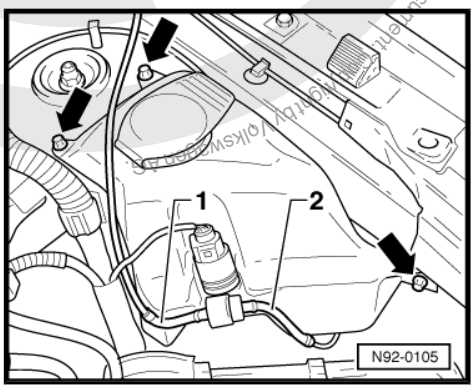

Protected by copyright. Copying for private or commercial purposes, in part or in whole, is not permitted unless authorised by Volkswagen AG. Volkswagen AG does not guarantee or accept any liability with respect to the correctness of information in this document.
satelettronica

3 Rear window wipe/wash system

Note

- *To disconnect and reconnect the battery, the procedure described in the workshop manual should be strictly adhered to* *⇒ page 4* *.*
- *If the vehicle has a radio with anti-theft coding, obtain code before disconnecting battery.*
- *When the battery is reconnected, check the vehicle equipment (radio, clock, window regulators) as per Workshop Manual and/or the Owner's Manual.*

3.1 Rear window wipe/wash system, vehicles ▸ 09.99

3.1.1 Assembly overview

1 - Wiper blade
- ❑ Adjusting park position ⇒ page 75

2 - Wiper arm

3 - M8 hexagon nut
- ❑ 15 Nm

4 - Washer

5 - Hexagon nut M16
- ❑ 7 Nm

6 - Cover

7 - Rubber ring

8 - Spray jet
- ❑ Adjusting ⇒ page 75
- ❑ With connecting pipe for

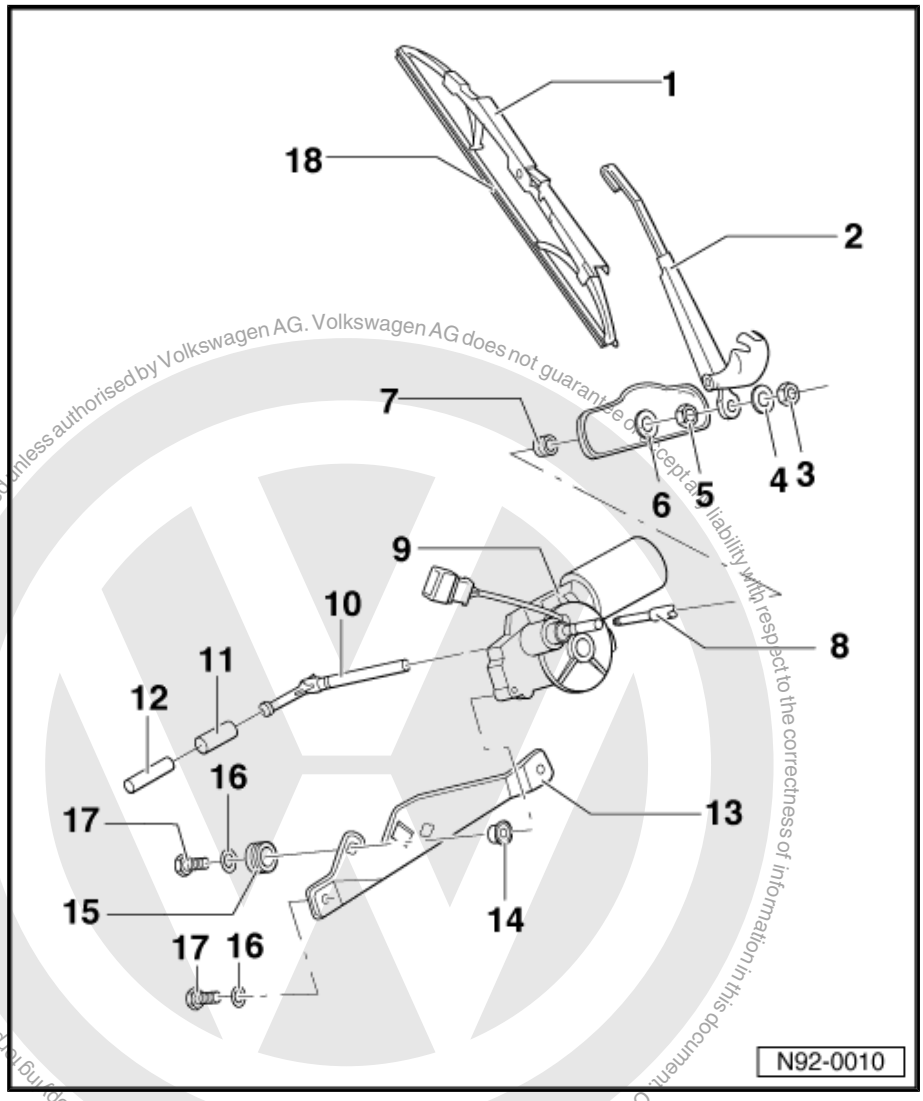

satelettronica
Protected by copyright. Copying for private or commercial purposes, in part or in whole, is not permitted unless authorised by Volkswagen AG. Volkswagen AG does not guarantee or accept any liability with respect to the correctness of information in this document. Copyright by Volkswagen AG

spray jet

9 - Wiper motor

10 - Connecting pipe for spray jet

- ❑ Renewing with spray jet

11 - Rubber hose

12 - Hose

13 - Wiper motor bracket

14 - Washer

15 - Rubber ring

16 - Washer

17 - Hexagon bolt M6

- ❑ 5 Nm

18 - Wiper blade rubber

- ❑ Removing and installing wiper rubber blade ⇒ page 68

3.1.2 Adjust rear window wiper park position, vehicles ▸ 09.99

Special tools and workshop equipment required

- ♦ Torque wrench -V.A.G 1331-

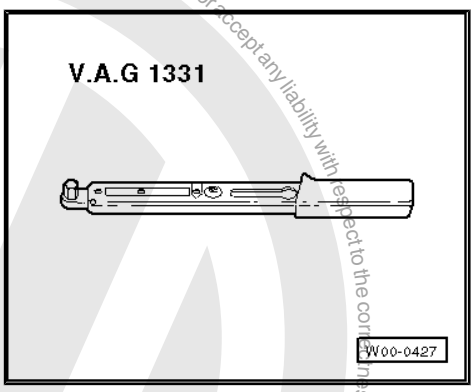

- ♦ Distance -a- between wiper rubber and lower edge of window must be 20 ... 30 mm.

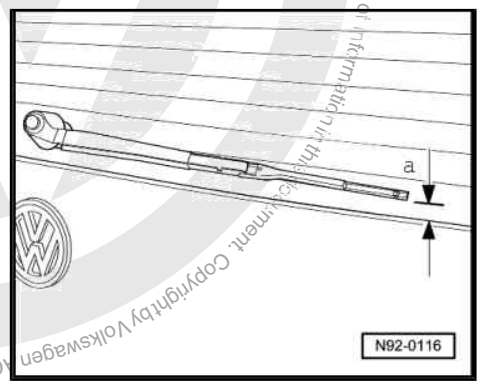

- ♦ Adjust park position by moving wiper arm as necessary. Specified torque for wiper arm: 15 Nm

3.1.3 Adjusting spray jet

Adjusting spray jet “Maintenance manual” ⇒ Maintenance ; Booklet ; Descriptions of work

Protected by copyright. Copying for private or commercial purposes, in part or in whole, is not permitted unless authorised by Volkswagen AG. Volkswagen AG does not guarantee or accept any liability with respect to the correctness of information in this document. Copyright by Volkswagen AG.
satelettronica

3.2 Rear window wipe/wash system, vehicles 10.99 ▸

3.2.1 Assembly overview, vehicles 10.99 ▸

1 - Cover cap

2 - 13 mm hexagon nut
- ❑ 15 Nm

3 - Wiper arm
- ❑ Adjusting park position ⇒ page 77

4 - Seal

5 - Spray jet
- ❑ Adjusting ⇒ page 78
- ❑ Renewing ⇒ page 78

6 - Spacer

7 - Rubber ring

8 - Wiper motor
- ❑ Removing ⇒ page 77

9 - Hexagon nut M6
- ❑ 8 Nm

10 - Seal

11 - Wiper blade
- ❑ Removing and installing wiper rubber blade ⇒ page 68

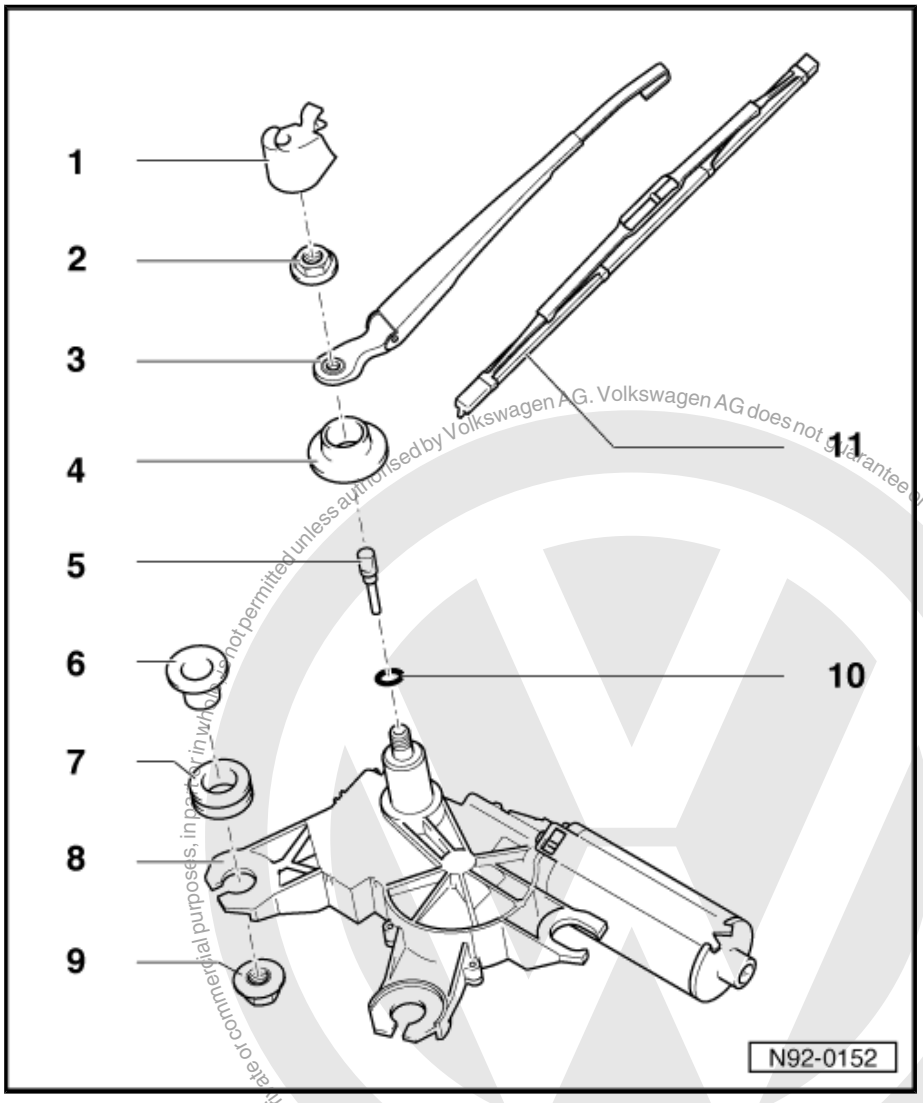

3.2.2 Removing and installing wiper arm, vehicles 10.99 ▸

– Open cover cap.

Protected by copyright. Copying for private or commercial purposes, in part or in whole, is not permitted unless authorised by Volkswagen AG. Volkswagen AG does not guarantee or accept any liability with respect to the correctness of information in this document. Copyright by Volkswagen AG.
satelettronica

– Loosen 13 mm hexagon nut -arrow-.

– Fold wiper arm up and release from taper by moving arm sideways.

– Remove hexagon nut and take wiper arm off.

Remove rear lid trim ⇒ General body repairs - Interior; Rep. Gr. 70 ; Trim/insulation; Load and luggage compartment trim; Removing and installing rear lid trim .

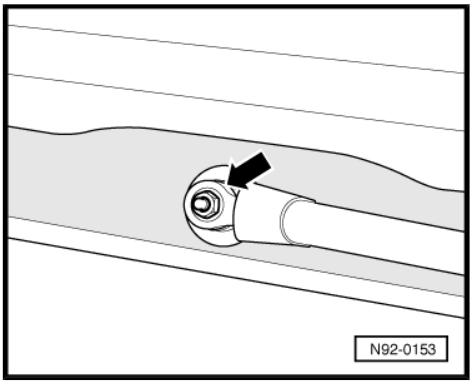

3.2.3 Removing rear window wiper motor, vehicles 10.99 ▸

– Pull connector -1- off wiper motor.

– Pull off hose -2- to spray jet.

– Remove 10 mm hexagon nuts -arrows- and remove wiper motor.

Installation is carried out in the reverse order. When installing observe the following:

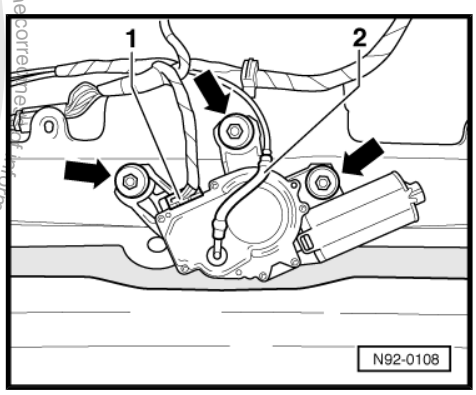

When installing wiper motor ensure that seal -arrow- seats in rear window.

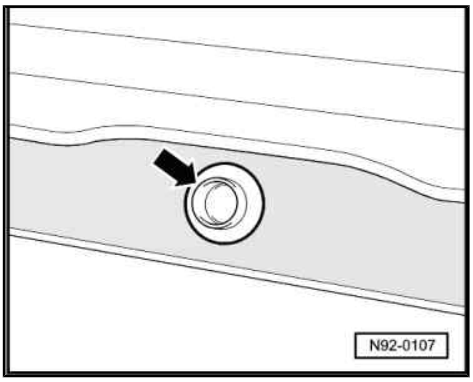

3.2.4 Adjust rear window wiper park position, vehicles 10.99 ▸

Special tools and workshop equipment required

♦ Torque wrench -V.A.G 1331-

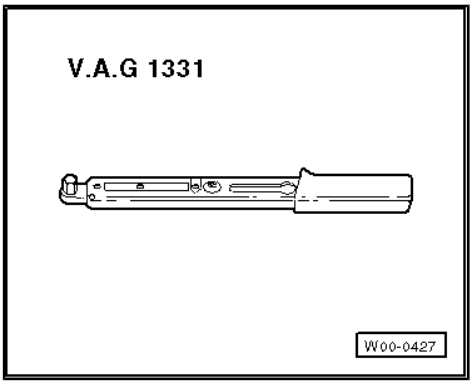

Protected by copyright. Copying for private or commercial purposes, in part or in whole, is not permitted unless authorised by Volkswagen AG. Volkswagen AG does not guarantee or accept any liability with respect to the correctness of information in this document. Copyright by Volkswagen AG.
satelettronica

Distance -a- between wiper rubber and lower edge of window must be 25 mm.

Adjust park position by moving wiper arm as necessary. Specified torque for wiper arm: 15 Nm

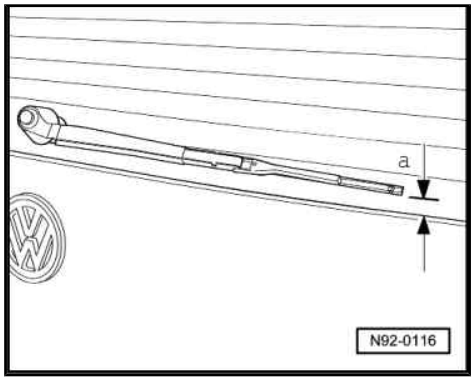

3.2.5 Renewing spray jet, vehicles 10.99 ▸

Removing:

– Allow wiper to run to park position.

– Fold back cap from rear window wiper.

– Using suitable pliers, carefully pull spray jet out in direction of arrow.

Installing:

– Push spray jet into wiper arm shaft onto stop, the opening in spray jet must point vertically upwards.

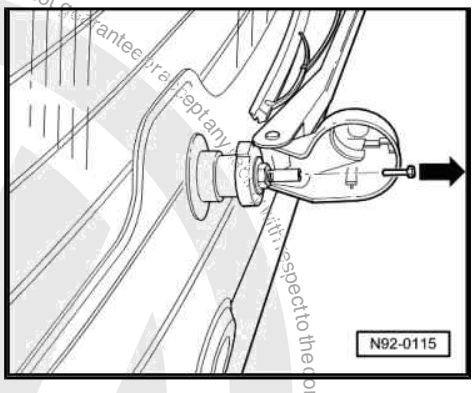

3.2.6 Adjusting spray jet

Adjusting spray jet “Maintenance manual” ⇒ Maintenance ; Booklet ; Descriptions of work

Protected by copyright. Copying for private or commercial purposes, in part or in whole, is not permitted unless authorised by Volkswagen AG. Volkswagen AG does not guarantee or accept any liability with respect to the correctness of information in this document. Copyright by Volkswagen AG.
satelettronica

4 Headlight washer system

4.1 Assembly overview of headlight washer system, vehicles ▸ 09.99

1 - Reservoir
- ❑ Capacity 7 litres
- ❑ Two-part, pressed together

2 - Headlight washer system pump
- ❑ Removing: turn in direction of arrow and pull.

3 - Hose 10 x 3

4 - Clip

5 - Back-pressure valve
- ❑ Observe arrows for hose connections
- ❑ Secured on front left cross member with clip

6 - To right spray jet

7 - Angled piece

8 - Water connection

9 - Spray jets
- ❑ Adjusting ⇒ page 79

10 - Cap

11 - Washer pump

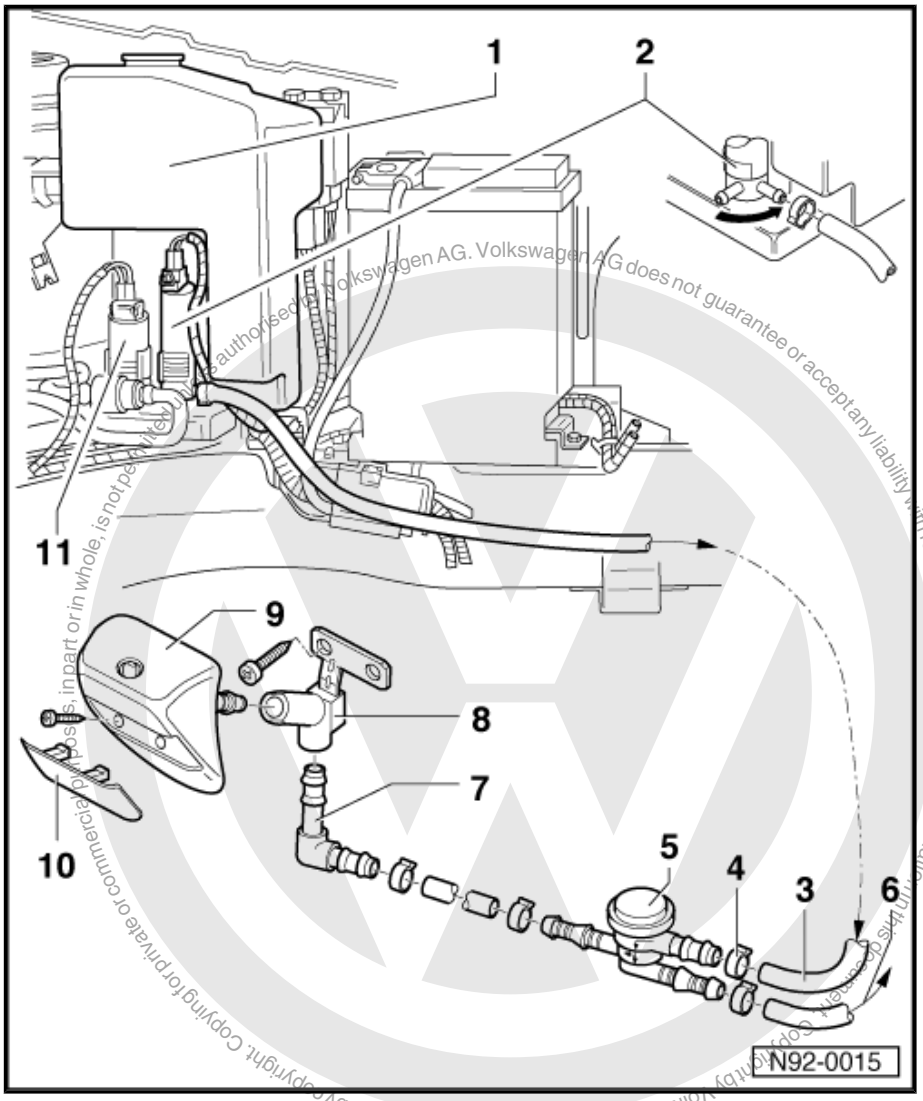

Protected by copyright. Copying for private or commercial purposes, in part or in whole, is not permitted unless authorised by Volkswagen AG. Volkswagen AG does not guarantee or accept any liability with respect to the correctness of information in this document. Copyright by Volkswagen AG.
satelettronica

4.1.1 Adjusting spray jets, vehicles ▸ 09.99

Adjusting spray jet “Maintenance manual” ⇒ Maintenance ; Booklet ; Descriptions of work

4.2 Assembly overview of headlight washer system, vehicles 10.99 ▸

1 - Spray jets
- ❑ Adjusting ⇒ page 80

2 - Spray jet assembly
- ❑ Removing and installing ⇒ page 80

3 - Hose

4 - Retaining clip

5 - T-piece

6 - Headlight washer system pump

7 - Washer fluid reservoir
- ❑ Under left wing
- ❑ Removing and installing ⇒ page 81

8 - Front bumper

9 - Spray jet pop-up cylinder
- ❑ Removing and installing ⇒ page 81

10 - Self-tapping screw

11 - Cover cap

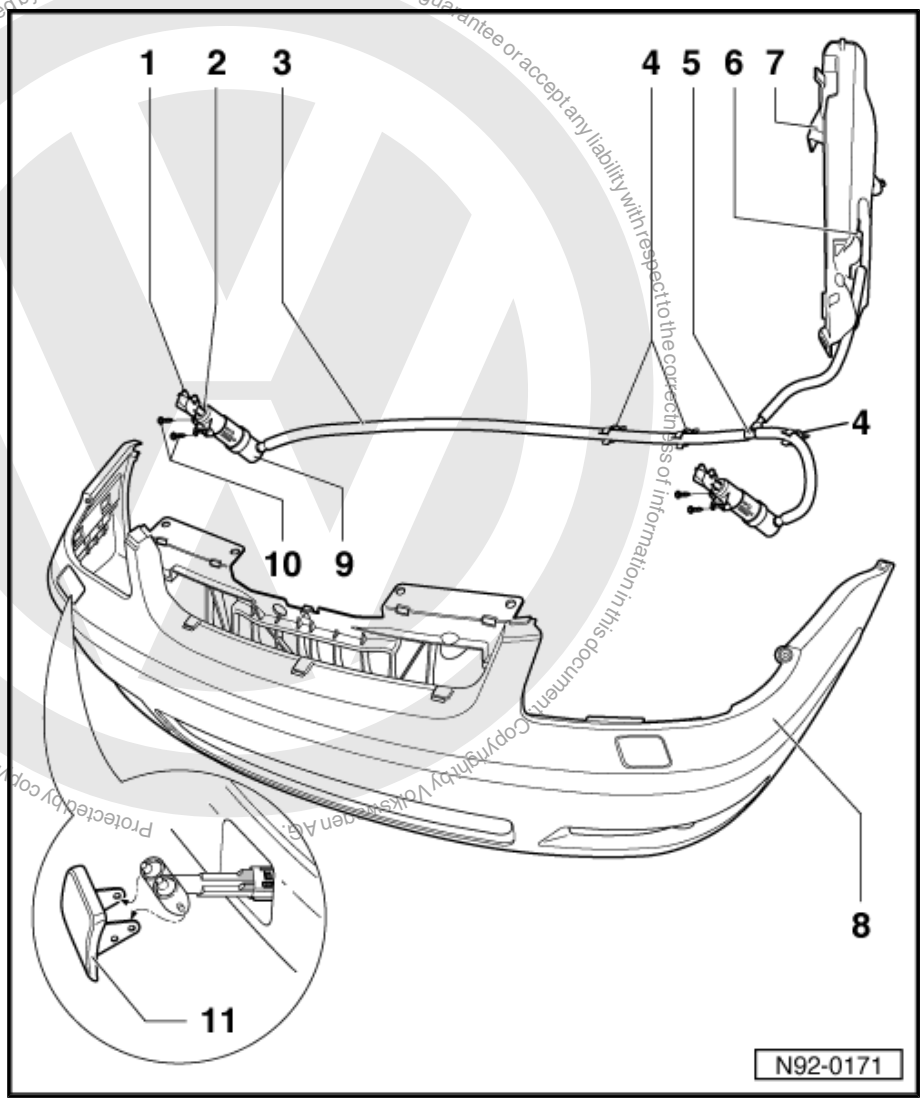

4.2.1 Adjusting spray jets, vehicles 10.99 ▸

Adjusting spray jet “Maintenance manual” ⇒ Maintenance ; Booklet ; Descriptions of work

4.2.2 Removing and installing spray jet assembly, vehicles 10.99 ▸

Note

The spray jet assembly can be removed with the bumper in situ.

Removing:

– Carefully pull spray jet out and hold in this position.

satelettronica

– Lift securing clip -arrow- slightly using a small screwdriver.
– Pull spray jet bracket out.

Installing:

– Slide spray jet assembly into pop-up cylinder until it engages.
– Adjusting spray jets ⇒ page 80

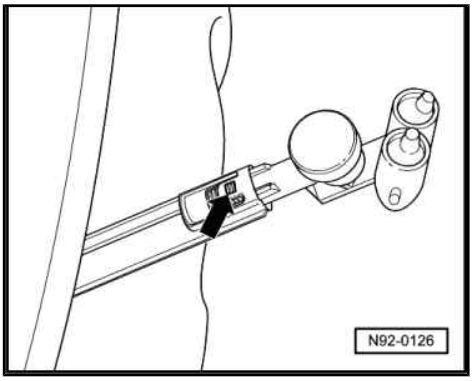

4.2.3 Removing and installing pop-up spray jet cylinder, vehicles 10.99 ▸

Removing:

– Remove bumper ⇒ General body repairs, exterior; Rep. Gr. 63 .
– Remove both bolts -arrow- on the pop-up cylinder.
– Pull out securing clip -1- on hose connection.
– Pull hose off pop-up cylinder.

Installing:

Installation is carried out in reverse order of removal.

– Adjusting spray jets ⇒ page 80

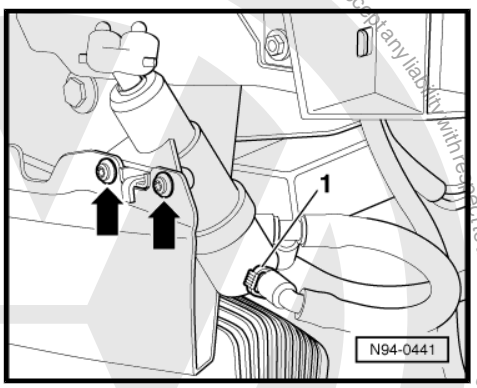

4.2.4 Removing washer fluid reservoir, vehicles 10.99 ▸

Removing:

– Remove washer fluid reservoir ⇒ page 73
– Removing left wheel housing liner ⇒ General body repairs, exterior; Rep. Gr. 66 ; Removing and installing wheel housing liner.
– Removing left turn signal repeater ⇒ page 116
– Unscrew plastic nuts -arrows- and carefully pull reservoir -1- downwards.

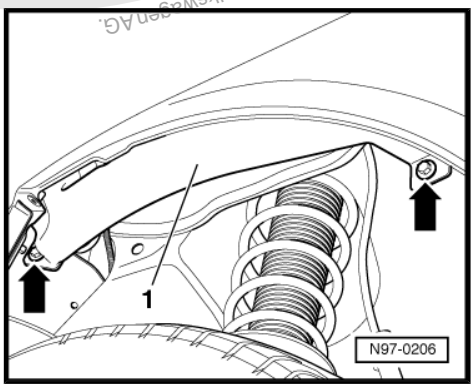

Protected by copyright. Copyright by Volkswagen AG. Volkswagen AG does not guarantee or accept any liability with respect to the correctness of information in this document. Copyright by Volkswagen AG. Reproduction, in part or in whole, is not permitted unless authorised by Volkswagen AG. Volkswagen AG does not guarantee or accept any liability with respect to the correctness of information in this document. Copyright by Volkswagen AG.
satelettronica

– Disconnect connector -1- and hose -2- from headlight washer system pump and remove reservoir.

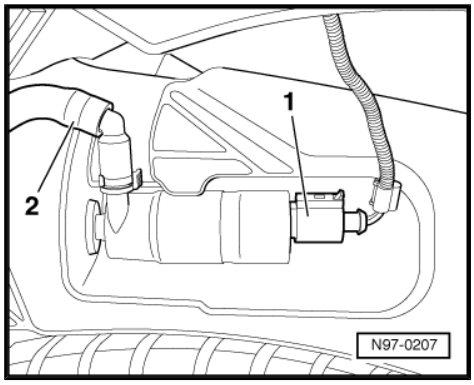

Installing:

Installation is carried out in reverse order of removal.

Protected by copyright. Copying for private or commercial purposes, in part or in whole, is not permitted unless authorised by Volkswagen AG. Volkswagen AG does not guarantee or accept any liability with respect to the correctness of information in this document. Copyright by Volkswagen AG.

satelettronica

94 – Lights, bulbs, switches - exterior

1 Headlights, vehicles ▸ 09.99

1.1 Assembly overview of headlights, vehicles ▸ 09.99

Protected by copyright. Copyright by Volkswagen AG. Volkswagen AG does not guarantee or accept any liability with respect to the correctness of information in this document. Copyright by Volkswagen AG. Copying for private or commercial purposes, in part or in whole, is not permitted unless authorised by Volkswagen AG.

Note

- *To disconnect and reconnect the battery, the procedure described in the workshop manual should be strictly adhered to* *⇒ page 4* *.*
- *If the vehicle has a radio with anti-theft coding, obtain code before disconnecting battery.*
- *After any measures which could affect the headlight setting, the headlights must be checked and if necessary adjusted ⇒ Maintenance ; Booklet 28 ; Descriptions of work .*

1 - Headlight

❑ Removing and installing ⇒ page 84

2 - Side light bulb

Bulb 12 V, 4 W

❑ Renewing ⇒ page 84

3 - Bulb carrier for side light

4 - Cap

5 - Retaining clip

6 - Twin filament bulb for main and dipped beam

Bulb H4 12 V, 60 W/55 W

❑ Renewing ⇒ page 85

7 - Headlight range control motor

The control motor is integrated in the headlight insert.

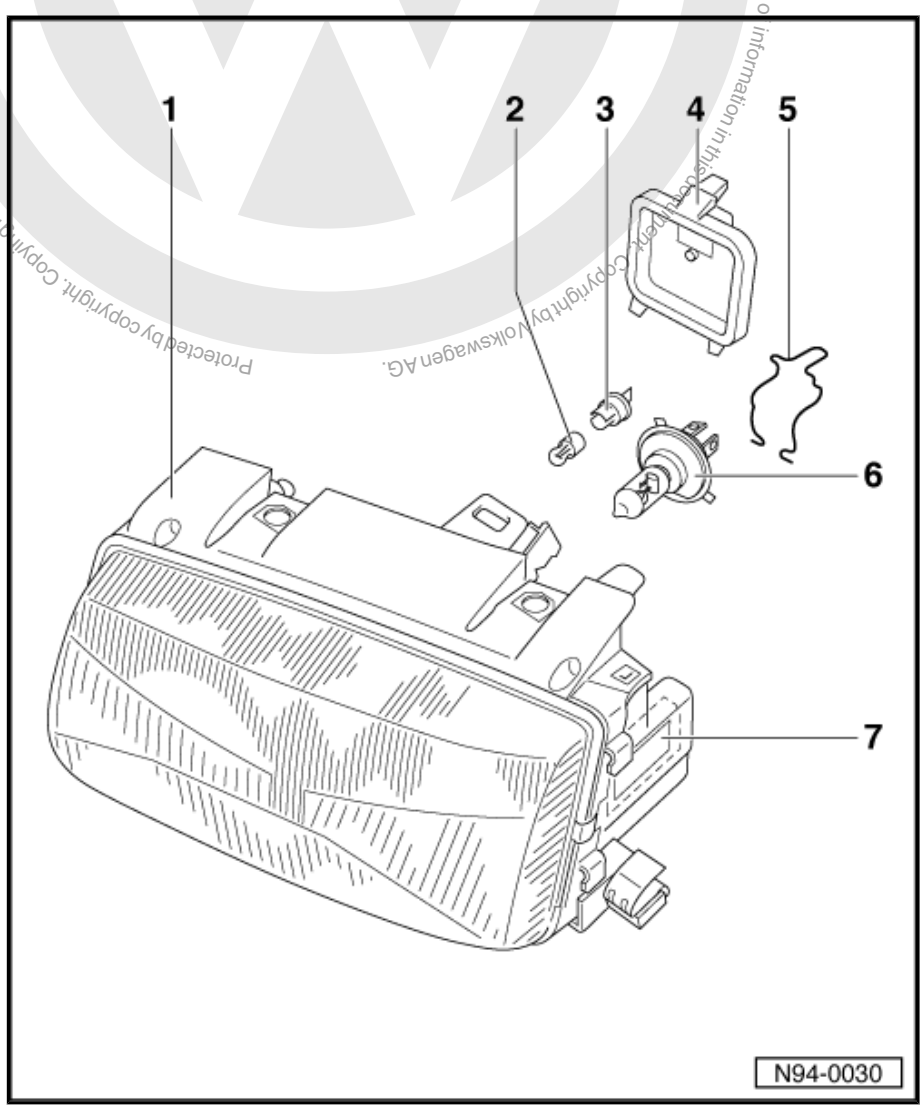

satelettronica

1.2 Removing and installing headlight, vehicles ▸ 09.99

Removing:

– Disconnect battery ⇒ page 4 .

– Remove turn signal ⇒ page 113 .

– Remove radiator grille trim and radiator grille.

– Disconnect headlight multi-pin connectors.

– Remove securing bolts -arrows-.

– Carefully insert hammer shaft between headlight housing and bumper; using hammer shaft, push headlight housing slightly upwards.

– Pull headlight housing out forwards.

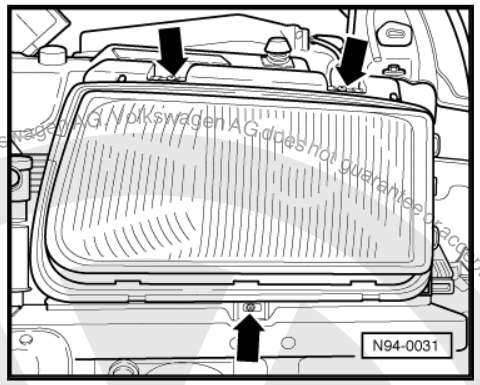

Note

Lower bolt is undetachably secured with a clip.

Installing:

Installation is carried out in the reverse order. When installing observe the following:

– Check function of headlight.

– Check headlight settings and adjust if necessary ⇒ Maintenance ; Booklet 28 ; Descriptions of work .

1.3 Renewing headlight bulbs, vehicles ▸ 09.99

1.3.1 Renewing side light bulb

Removing:

– Disconnect battery ⇒ page 4 .

– Release sealing cover on rear of headlight housing and remove.

Protected by copyright. Copyright by Volkswagen AG. Volkswagen AG does not guarantee or accept any liability with respect to the correctness of information in this document. Copying for private or commercial purposes, in part or in whole, is not permitted unless authorised by Volkswagen AG.
satelettronica

– Pull holder -4- with bulb on connector out of reflector.

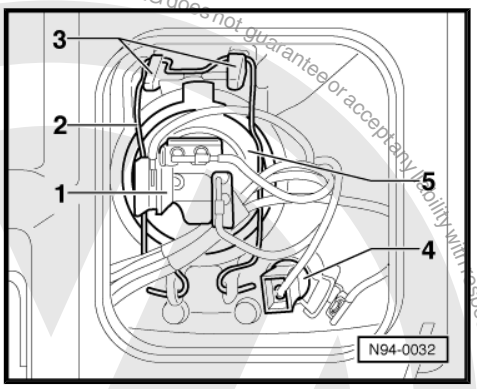

Installing:

Installation is carried out in the reverse order. When installing observe the following:

Note

Do not touch glass envelope when fitting a new bulb. Fingers leave traces of grease on the glass envelope, which evaporate when the bulb is switched on and cause the glass envelope to cloud over.

– After changing bulb, push bulb with holder into reflector onto stop.

– Check function of headlight.

– Check headlight settings and adjust if necessary ⇒ Maintenance ; Booklet 28 ; Descriptions of work .

1.3.2 Renewing dipped beam and main beam bulb

Removing:

– Disconnect battery ⇒ page 4 .

– Release sealing cover on rear of headlight housing and remove.

– Release connector -1- and pull off twin-filament bulb.

– Unclip retaining clip -2- over retaining lugs -3- and swing clip downwards.

– Pull twin-filament bulb -5- out of reflector.

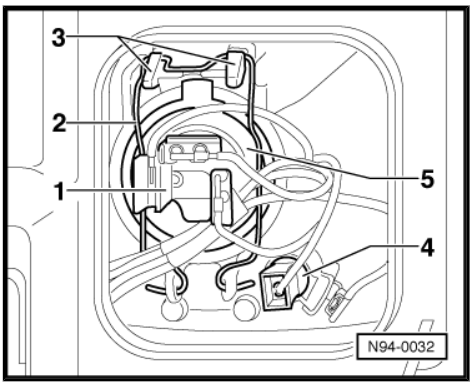

Installing:

Installation is carried out in the reverse order. When installing observe the following:

Note

Do not touch glass envelope when fitting a new bulb. Fingers leave traces of grease on the glass envelope, which evaporate when the bulb is switched on and cause the glass envelope to cloud over.

– Insert new bulb so that the lugs on the disc plate align with the recesses in the reflector.

– Check function of headlight.

– Check headlight settings and adjust if necessary ⇒ Maintenance ; Booklet 28 ; Descriptions of work .

1.4 Removing and installing headlight range control motor

The control motor is integrated in the headlight insert. The headlight range control motor cannot be removed.

The headlight must be renewed if the headlight range control motor is defective.

Protected by copyright. Copying for private or commercial purposes, in part or in whole, is not permitted unless authorised by Volkswagen AG. Volkswagen AG does not guarantee or accept any liability with respect to the correctness of information in this document. Copyright by Volkswagen AG.
satelettronica

1.5 Adjusting headlights, vehicles ▸ 09.99

1.5.1 Adjusting headlights

⇒ Maintenance ; Booklet 28 ; Descriptions of work:

Protected by copyright. Copying for private or commercial purposes, in part or in whole, is not permitted unless authorised by Volkswagen AG. Volkswagen AG does not guarantee or accept any liability with respect to the correctness of information in this document. Copyright by Volkswagen AG.

satelettronica

2 Headlights, vehicles 10.99 ▸

2.1 Assembly overview of headlights, vehicles 10.99 ▸

Protected by copyright. Copying for private or commercial purposes, in part or in whole, is not permitted unless authorised by Volkswagen AG. Volkswagen AG does not guarantee or accept any liability with respect to the correctness of information in this document. Copyright by Volkswagen AG.

Note

- *To disconnect and reconnect the battery, the procedure described in the workshop manual should be strictly adhered to ⇒ page 4 .*
- *If the vehicle has a radio with anti-theft coding, obtain code before disconnecting battery.*
- *After any measures which could affect the headlight setting, the headlights must be checked and if necessary adjusted ⇒ Maintenance ; Booklet ; Descriptions of work .*

1 - Cover cap

2 - Headlight range control motor

❑ Removing and installing ⇒ page 91

3 - Side light bulb

Bulb 12 V, 5 W

❑ Renewing ⇒ page 88

4 - Main beam bulb

Bulb H1, 12 V, 55 W

❑ Renewing ⇒ page 88

5 - Dipped beam bulb

Bulb H7, 12 V, 55 W

❑ Renewing ⇒ page 88

6 - Headlight

❑ Removing and installing ⇒ page 88

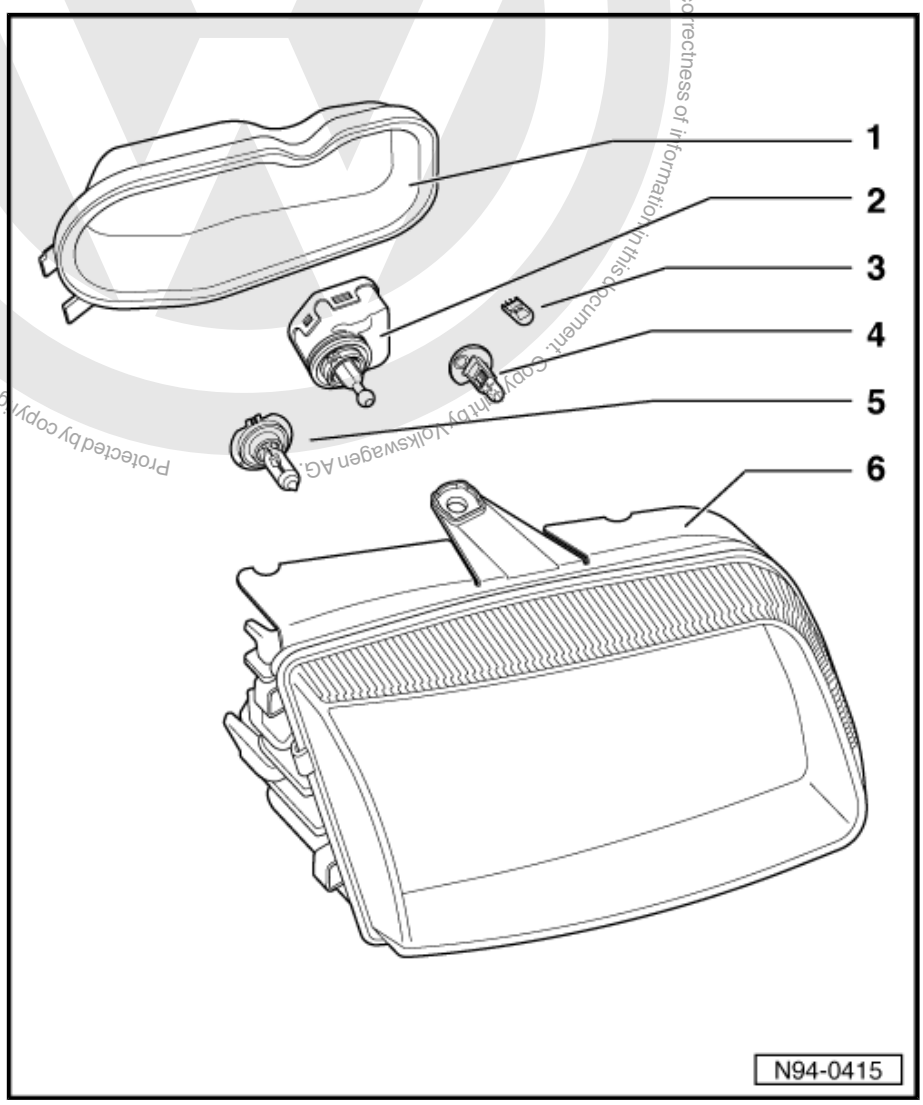

satelettronica

2.2 Removing and installing headlight, vehicles 10.99 ▸

Removing:

- Disconnect battery ⇒ page 4 .
- Remove front turn signal ⇒ page 113 .
- Removing radiator grille ⇒ General body repairs, exterior; Rep. Gr. 66 ; Exterior equipment; Trims; Removing and installing radiator grille and trim frame .
- Disconnect connectors on fog lights.
- Remove front bumper ⇒ General body repairs, exterior; Rep. Gr. 63 ; Bumpers; Front bumper .
- Remove securing bolts -arrows-.
- Carefully pull headlight forwards; disconnect multi-pin connector and remove headlight forwards.

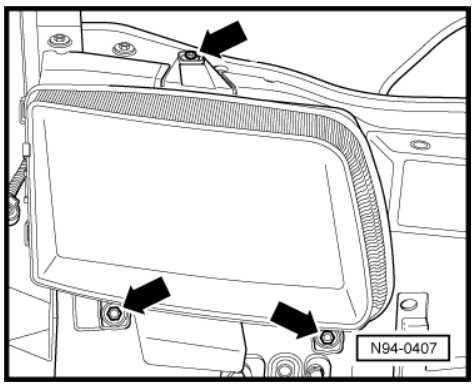

Installing:

Installation is carried out in the reverse order. When installing observe the following:

- The centring pin -2- must fit in recess -1-.
- Check function of headlight.
- Check headlight settings and adjust if necessary ⇒ Maintenance ; Booklet ; Descriptions of work .

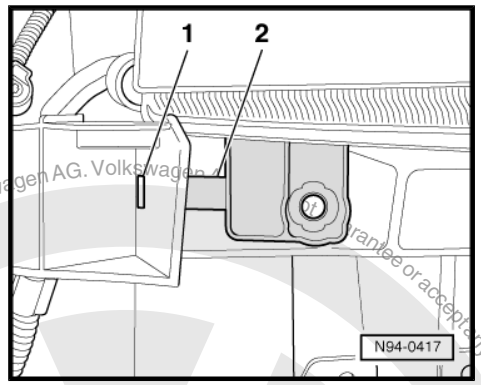

2.3 Renewing headlight bulbs, vehicles 10.99 ▸

2.3.1 Renewing dipped beam bulb

Removing:

- Disconnect battery ⇒ page 4 .

Protected by copyright. Copying for private or commercial purposes, in part or in whole, is not permitted unless authorised by Volkswagen AG. Volkswagen AG does not guarantee or accept any liability with respect to the correctness of information in this document. Copyright by Volkswagen AG.
satelettronica

– Release spring clip -arrow- and take off sealing cap.

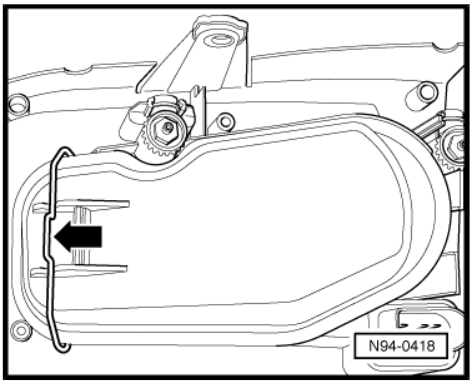

– Pull connector -1- off bulb.
– Unclip retaining clip -2- over retaining lugs -3- and release.
– Pull bulb -4- out of reflector.

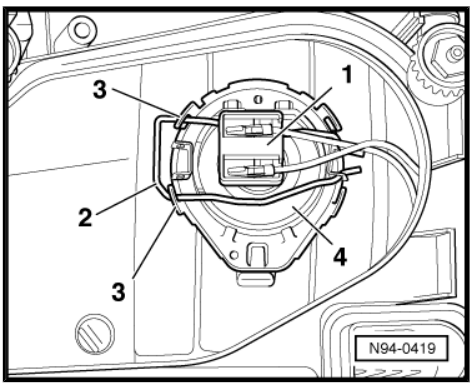

Installing:

Note

Do not touch glass envelope when fitting a new bulb. Fingers leave traces of grease on the glass envelope, which evaporate when the bulb is switched on and cause the glass envelope to cloud over.

– Insert new bulb so that the lugs on the disc plate align with the recesses in the reflector.
– Unclip retaining clip -2- under retaining lugs -3- and lock.
– Reconnect connector -1-.
– Fit sealing cap.
– Check function of headlight.
– Check headlight settings and adjust if necessary ⇒ Maintenance ; Booklet ; Descriptions of work .

2.3.2 Renewing main beam bulb

Removing:

– Disconnect battery ⇒ page 4 .
– Release spring clip -arrow- and take off sealing cap.

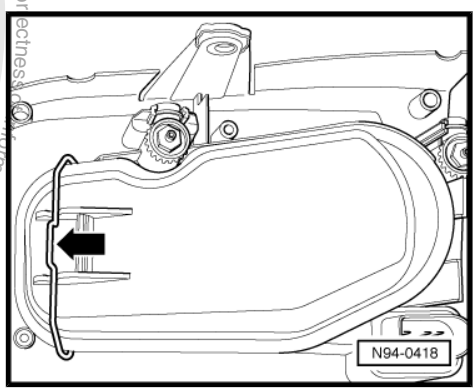

Protected by copyright. Copying for private or commercial purposes, in part or in whole, is not permitted unless authorised by Volkswagen AG. Volkswagen AG does not guarantee or accept any liability with respect to the correctness of information in this document. Copyright by Volkswagen AG.
satelettronica

– Pull connector -1- off bulb.
– Unclip retaining clip -2- over retaining lug -3- and release.
– Pull bulb -4- out of reflector.

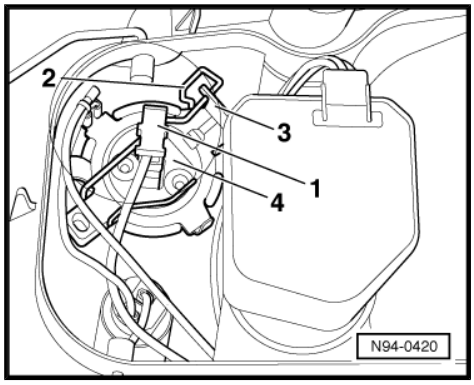

Installing:

Note

Do not touch glass envelope when fitting a new bulb. Fingers leave traces of grease on the glass envelope, which evaporate when the bulb is switched on and cause the glass envelope to cloud over.

– Insert new bulb so that the lugs on the disc plate align with the recesses in the reflector.

– Unclip retaining clip -2- under retaining lugs -3- and lock.
– Reconnect connector -1-.
– Fit sealing cap.
– Check function of headlight.
– Check headlight settings and adjust if necessary ⇒ Maintenance ; Booklet ; Descriptions of work .

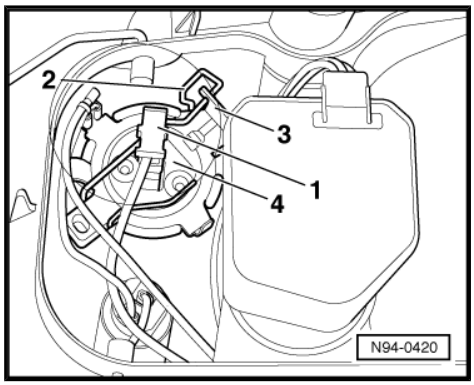

2.3.3 Renewing side light bulb

Removing:

– Disconnect battery ⇒ page 4 .
– Release spring clip -arrow- and take off sealing cap.

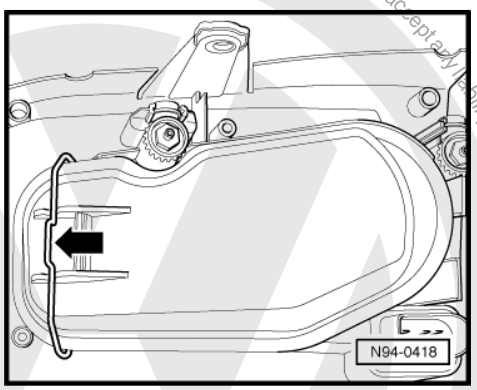

Protected by copyright. Copying for private or commercial purposes, in part or in whole, is not permitted unless authorised by Volkswagen AG. Volkswagen AG does not guarantee or accept any liability with respect to the correctness of information in this document. Copyright by Volkswagen AG.
satelettronica

– Pull holder with bulb on connector out of reflector -arrow-.

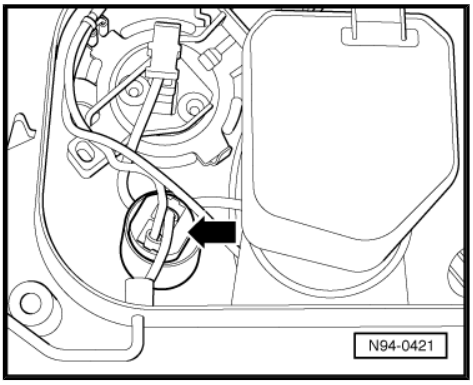

Installing:

Note

Do not touch glass envelope when fitting a new bulb. Fingers leave traces of grease on the glass envelope, which evaporate when the bulb is switched on and cause the glass envelope to cloud over.

– After changing bulb, push bulb with holder into reflector onto stop.

– Fit sealing cap.

– Check function of headlight.

– Check headlight settings and adjust if necessary ⇒ Maintenance ; Booklet ; Descriptions of work .

2.4 Removing and installing headlight range control motor, vehicles 10.99 ▸

Note

- *The control motor can only be removed and installed when the headlight housing has been removed.*
- *If control motors are renewed or removed and installed, the headlight adjustment must be checked and adjusted with adjusting device, if necessary ⇒ Maintenance ; Booklet ; Descriptions of work .*

2.4.1 Removing:

– Disconnect battery ⇒ page 4 .

– Remove headlight ⇒ page 88

– Release spring clip -arrow- and take off sealing cap.

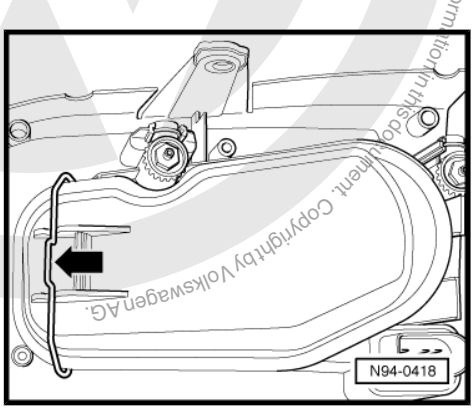

Protected by copyright. Copying for private or commercial purposes, in part or in whole, is not permitted unless authorised by Volkswagen AG. Volkswagen AG does not guarantee or accept any liability with respect to the correctness of information in this document. Copyright by Volkswagen AG.
satelettronica

– Disconnect headlight range control motor connector -1-.

– Release left-hand headlight control motor -arrow- by turning to right and right-hand control motor by turning to left.

– Pull positioning pin ball head sideways out of guide on reflector.

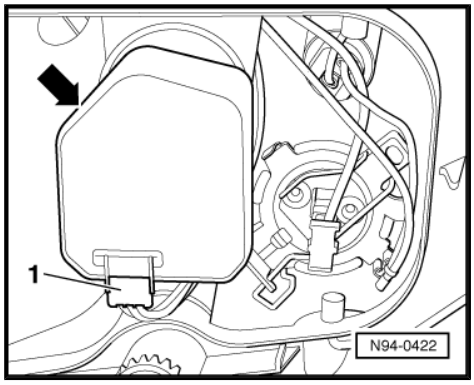

2.4.2 Installing:

– Carefully insert positioning pin of control motor -1- into ball head guide -2-. Push up reflector base plate when doing so.

– Lock control motor in position by turning.

– Reconnect connectors.

– Fit sealing cap.

– Install headlight ⇒ page 88 .

– Check headlight settings and adjust if necessary ⇒ Maintenance ; Booklet ; Descriptions of work .

– Check function of headlight.

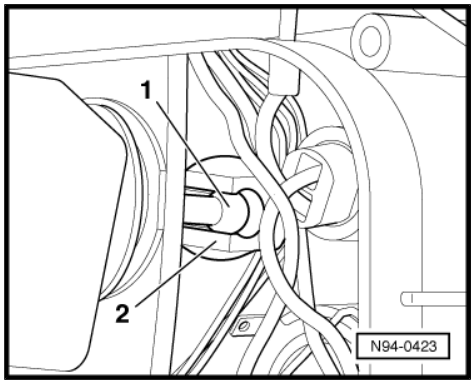

2.5 Repairing retaining tabs on headlight

Note

- *The prerequisite for repairing is that the headlight housing is not further damaged.*
- *To disconnect and reconnect the battery, the procedure described in the workshop manual should be strictly adhered to* *⇒ page 4* *.*
- *When the battery is reconnected, check the vehicle equipment (radio, clock, window regulators) as per Workshop Manual and/or the Owner's Manual.*
- *The left headlight is shown in the following illustration. On right headlight the components are a mirror image.*

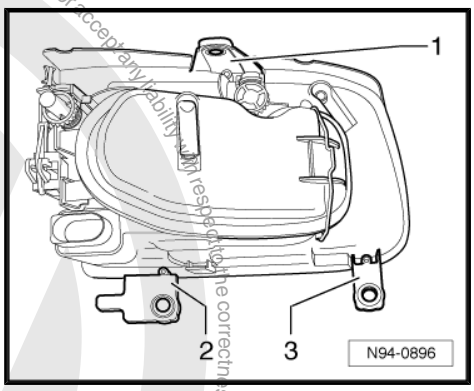

1 - Repairing upper retaining tab ⇒ page 92

2 - Repairing lower left retaining tab ⇒ page 93

3 - Repairing lower right retaining tab ⇒ page 94

2.5.1 Repairing upper retaining tab

– Disconnect battery ⇒ page 4 .

– Remove headlight ⇒ page 88 .

Protected by copyright. Copying for private or commercial purposes, in part or in whole, is not permitted unless authorised by Volkswagen AG. Volkswagen AG does not guarantee or accept any liability with respect to the correctness of information in this document. Copyright by Volkswagen AG.
satelettronica

– Insert reinforcing ring -1- in direction of arrow into replacement part retaining tab -2-.
– Sand headlight retaining tab base on headlight down flat at breakage point.

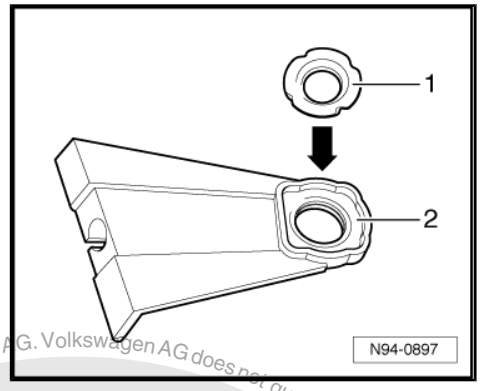

– Position replacement part retaining tab -2- on headlight retaining tab base -3- and secure with bolt -1-.
– Install headlight ⇒ page 88 .
– Check headlight settings and adjust if necessary ⇒ Maintenance ; Booklet ; Descriptions of work.
– Check function of headlight.

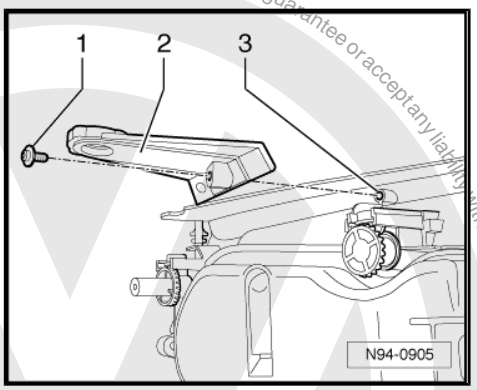

2.5.2 Repairing lower left retaining tab

– Disconnect battery ⇒ page 4 .
– Remove headlight ⇒ page 88 .

Note

The form of the retaining tab of the repair kit differs from the form of the original.

– Insert reinforcing ring -1- in direction of arrow into replacement part retaining tab -2-.
– Sand headlight retaining tab base on headlight down flat at breakage point.

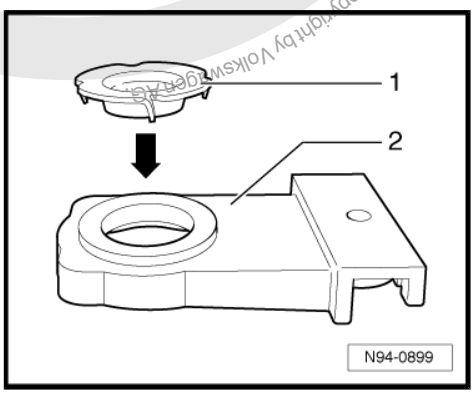

Protected by copyright. Copying for private or commercial purposes, in part or in whole, is not permitted unless authorised by Volkswagen AG. Volkswagen AG does not guarantee or accept any liability with respect to the correctness of information in this document. Copyright by Volkswagen AG
satelettronica

– Position replacement part retaining tab -2- on headlight retaining tab base -3- and secure with bolt -1-.
– Install headlight ⇒ page 88 .
– Check headlight settings and adjust if necessary ⇒ Maintenance ; Booklet ; Descriptions of work .
– Check function of headlight.

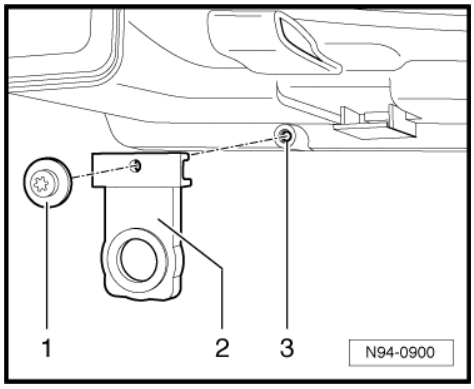

2.5.3 Repairing lower right retaining tab

– Disconnect battery ⇒ page 4 .
– Remove headlight ⇒ page 88 .
– Insert reinforcing ring -1- in direction of arrow into replacement part retaining tab -2-.
– Sand headlight retaining tab base on headlight down flat at breakage point.

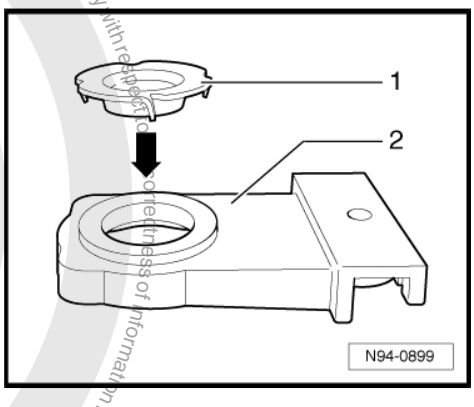

– Position replacement part retaining tab -2- on headlight retaining tab base -3- and secure with bolt -1-.
– Install headlight ⇒ page 88 .
– Check headlight settings and adjust if necessary ⇒ Maintenance ; Booklet ; Descriptions of work .
– Check function of headlight.

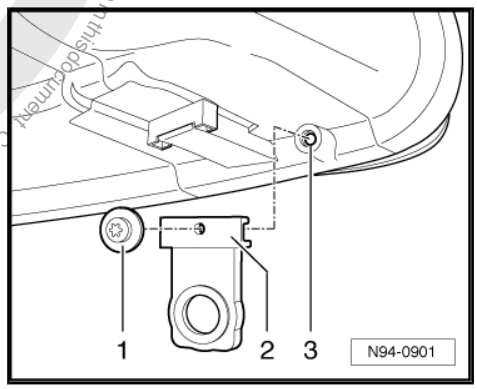

2.6 Headlight conversion for driving on left/ right

Note

- *The headlight conversion set comprises 2 pieces of film.*
- *The pieces of film are suitable for converting from driving on right to driving on left, and for converting from driving on left to driving on right.*
- *Clean headlight lens before converting.*

Protected copyright. Copying for private or commercial purposes, in part or in whole, is not permitted unless authorised by Volkswagen AG. Volkswagen AG does not guarantee or accept any liability with respect to the correctness of information in this document. Copyright by Volkswagen AG.
satelettronica

Film conversion set for Polo with normal headlights

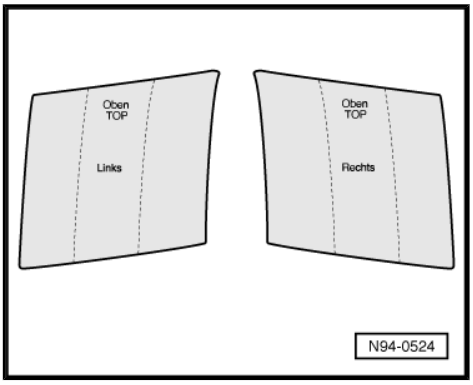

2.6.1 Conversion from driving on right to driving on left

(For vehicles from European countries driving on right with left-hand drive)

– For right headlight use film with lettering “Rechts” (right headlight) and for left headlight use film with lettering “Links” (left headlight).

– Remove protective paper from application film.

– Align application film on headlight so that the film edge with the lettering “Oben/ TOP” is positioned on the upper edge of the headlight. For this, the film must be simultaneously positioned along the headlight edge on the turn signal side -arrows-.

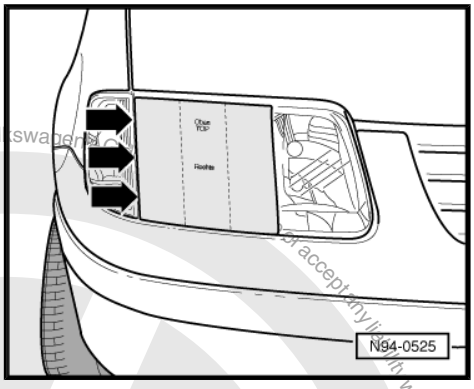

– Remove assembly film from left headlight. The masking film cut-out -1- remains on headlight.

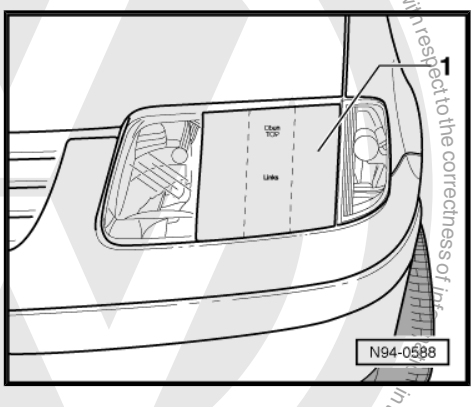

Protected by copyright. Copying for private or commercial purposes, in part or in whole is not permitted unless authorised by Volkswagen AG. Volkswagen AG does not accept any liability with respect to the correctness of information in this document. Copyright by Volkswagen AG.
satelettronica

– Remove assembly film from right headlight. The masking film cut-out -1- remains on headlight.

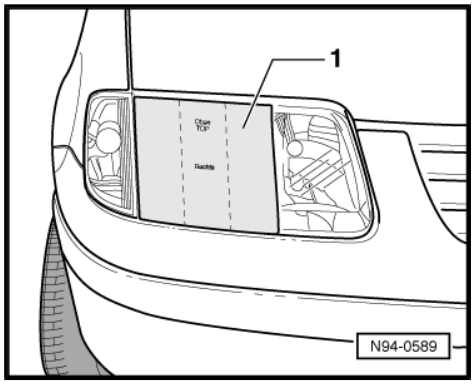

Note

Any adhesive material remaining on headlight plastic cover after removing the film should be removed with an alcohol or alcohol and water based cleanser. For example a cloth soaked with isopropyl alcohol.

2.6.2 Conversion from driving on left to driving on right

(For vehicles from European countries driving on left with right-hand drive)

– For right headlight use film with lettering “Rechts” (right headlight) and for left headlight use film with lettering “Links” (left headlight).

– Remove protective paper from application film.

– Align application film on headlight so that the film edge with the lettering “Oben/ TOP” is positioned on the upper edge of the headlight. For this, the film must be simultaneously positioned along the headlight edge on the turn signal side -arrows-.

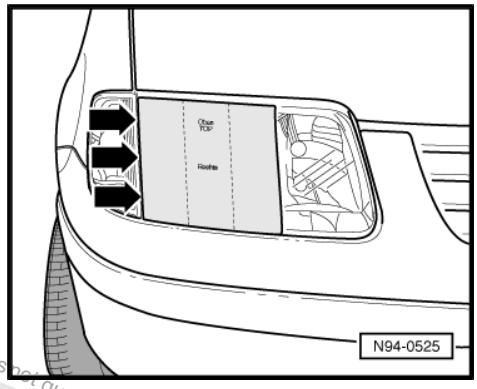

– Remove assembly film from left headlight. The masking film cut-out -1- remains on headlight.

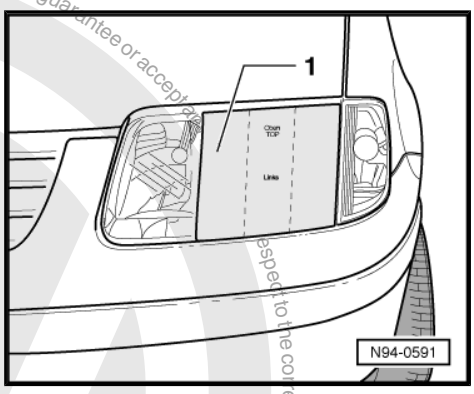

Protected by copyright. Copying for private or commercial purposes, in part or in whole, is not permitted unless authorised by Volkswagen AG. Volkswagen AG does not guarantee or accept any liability with respect to the correctness of information in this document. Copyright by Volkswagen AG.

satelettronica

– Remove assembly film from right headlight. The masking film cut-out -1- remains on headlight.

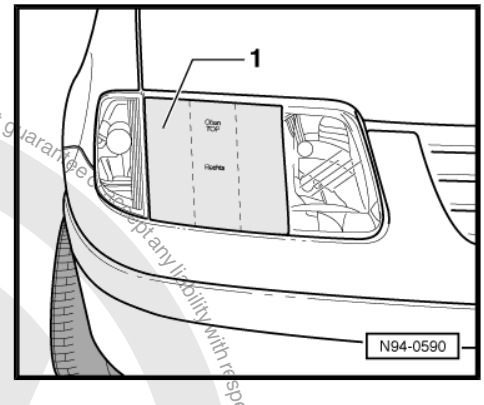

Note

Any adhesive material remaining on headlight plastic cover after removing the film should be removed with an alcohol or alcohol and water based cleanser. For example a cloth soaked with iso-propyl alcohol.

2.7 Adjusting headlights, vehicles 10.99 ▸

⇒ Maintenance ; Booklet ; Descriptions of work:

Protected by copyright. Copying for private or commercial purposes, in part or in whole, is not permitted unless authorised by Volkswagen AG. Volkswagen AG does not guarantee or accept any liability with respect to the correctness of information in this document. Copyright by Volkswagen AG.
satelettronica

3 Headlights with gas discharge bulbs

Note

- *To disconnect and reconnect the battery, the procedure described in the workshop manual should be strictly adhered to* *⇒ page 4* *.*
- *When the battery is reconnected, check the vehicle equipment (radio, clock, window regulators) as per Workshop Manual and/or the Owner's Manual.*
- *The headlight range control with gas discharge bulbs is equipped with self-diagnosis.*
- *When dealing with complaints, it is absolutely essential that the function and operation of the lighting system are first understood.*
- *Additional information ⇒ Operating instructions*

Fault finding

The automatic headlight range control for headlights with gas discharge bulbs is equipped with a self-diagnosis, which makes fault finding easier.

Use -VAS 5051- vehicle diagnostic, testing and information system -V.A.G 1551- for fault finding.

– Carry out self-diagnosis automatic headlight range control ⇒ Electrical system, self-diagnosis; Rep. Gr. 01 ; Self-diagnosis of automatic headlight range control; Carrying out self diagnosis of automatic headlight range control .

3.1 Assembly overview of headlights with gas discharge bulbs

Note

After any measures which could affect the headlight setting, the headlights must be checked and if necessary adjusted ⇒ Maintenance ; Booklet ; Descriptions of work .

Protected by copyright. Copyright by Volkswagen AG. Volkswagen AG does not guarantee or accept any liability with respect to the correctness of information in this document. Copyright by Volkswagen AG.
satelettronica

Protected by copyright. Copying for private or commercial purposes, in part or in whole, is not permitted unless authorised by Volkswagen AG. Volkswagen AG does not guarantee or accept any liability with respect to the correctness of information in this document. Copyright by Volkswagen AG

1 - Cross-head screws

2 - Retaining frame

- ❑ for control unit for gas discharge bulb

3 - Gas discharge bulb control unit

- ❑ Removing and installing ⇒ page 105

4 - Cover cap

5 - Retaining ring

6 - Dipped beam gas discharge bulb

- ❑ 55 W
- ❑ Renewing ⇒ page 99

7 - Main beam bulb

Bulb H1, 12 V, 55 W

- ❑ Renewing ⇒ page 102

8 - Side light bulb

Bulb 12 V, 5 W

- ❑ Renewing ⇒ page 103

9 - Headlight range control motor

- ❑ Removing and installing ⇒ page 104

10 - Headlight

- ❑ Removing and installing ⇒ page 88

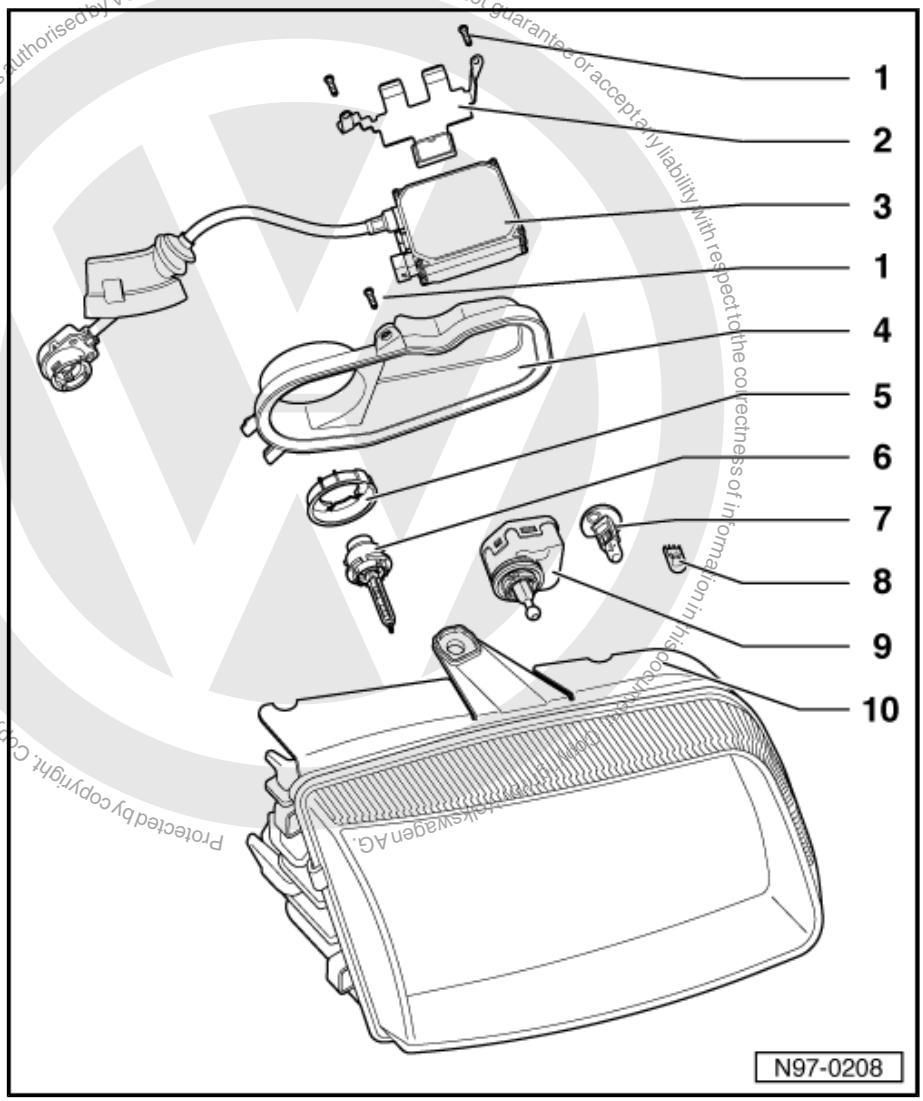

3.2 Removing and installing headlight

– Remove headlight ⇒ page 88 .

3.3 Renewing gas discharge headlight bulb

3.3.1 Renewing dipped beam bulb (gas discharge bulb)

Removing:

– Disconnect battery ⇒ page 4 .

satelettronica

– Pull off rubber cap -arrow- on headlight housing.

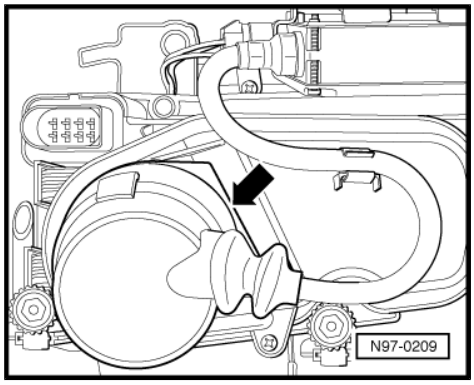

– Release connector -1- by turning in direction of travel and disconnect.

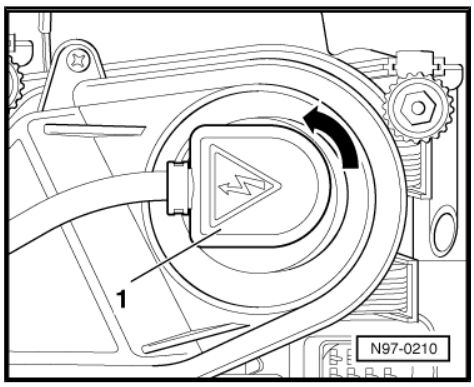

Protected by copyright. Copying for private or commercial purposes, in part or in whole, is not permitted unless authorised by Volkswagen AG. Volkswagen AG does not guarantee or accept any liability with respect to the correctness of information in this document. Copyright by Volkswagen AG.

satelettronica

– Release retaining ring by turning in direction of arrow and remove.

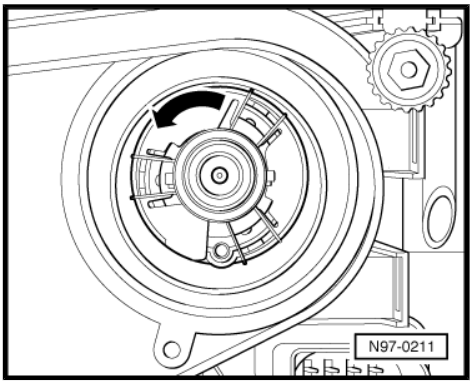

> **WARNING**
>
> ***Always wear eye protection and gloves when removing and installing gas discharge bulb!***

Eye protection and gloves are necessary because the glass envelope of the gas discharge bulb is mechanically very sensitive and the interior of the bulb is under a pressure of 7 bar (cold) to 100 bar (warm) and the temperature around the glass envelope can reach up to 700 degrees Celsius.

– Carefully pull gas discharge bulb out of headlight housing.

Installing:

Installation is carried out in the reverse order. When installing observe the following:

> **Note**
>
> ♦ *Do not touch bulb glass when fitting a new gas discharge bulb. Fingers leave traces of grease on the glass envelope, which evaporate when the bulb is switched on and cause the glass envelope to cloud over.*
>
> ♦ *Ensure that the glass envelope is not stressed mechanically. The bulb glass is extremely fragile and has a high internal pressure.*
>
> ♦ *Avoid looking directly into the collimated beam as the UV rays from the gas discharge bulb are about 2.5 times greater than normal halogen bulbs.*

– Insert new bulb so that the lugs on the disc plate align with the recesses in the reflector.

– Insert retaining ring by turning in direction of arrow and lock.

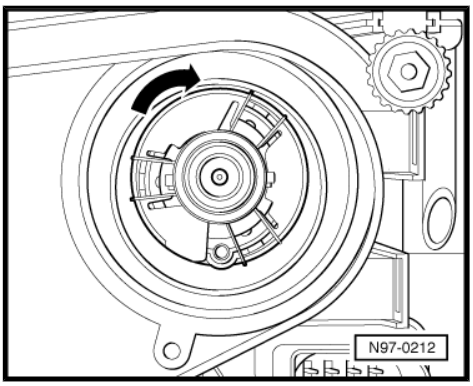

Protected by copyright. Copying for private or commercial purposes, in part or in whole, is not permitted unless authorised by Volkswagen AG. Volkswagen AG does not guarantee or accept any liability with respect to the correctness of information in this document. Copyright by Volkswagen AG.

satelettronica

– Lock connector -1- by turning in direction of arrow.
– Check headlight settings and adjust if necessary ⇒ Maintenance ; Booklet ; Descriptions of work .
– Check function of headlight.

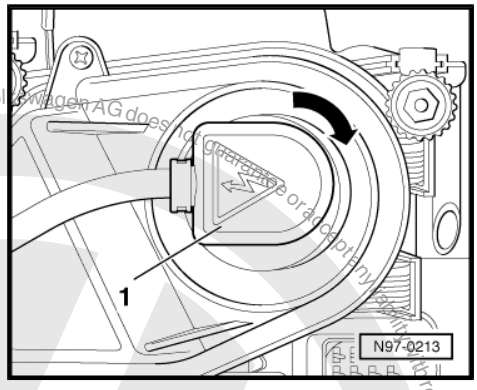

3.3.2 Renewing main beam bulb

Removing:

– Disconnect battery ⇒ page 4 .
– Remove headlight ⇒ page 88 .
– Remove gas discharge bulb control unit ⇒ page 105 .
– Unscrew bolt -1- and remove cover cap -2-.

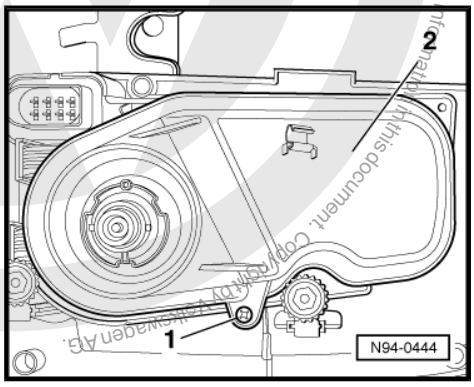

– Pull connector -1- off bulb.
– Unclip retaining clip -2- over retaining lug -3- and release.
– Pull bulb -4- out of reflector.

Installing:

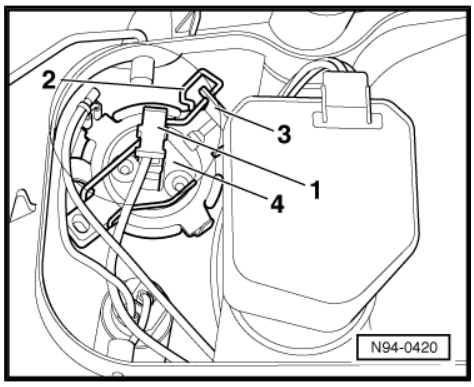

Note

Do not touch glass envelope when fitting a new bulb. Fingers leave traces of grease on the glass envelope, which evaporate when the bulb is switched on and cause the glass envelope to cloud over.

– Insert new bulb so that the lugs on the disc plate align with the recesses in the reflector.

Protected by copyright. Copying for private or commercial purposes, in part or in whole, is not permitted unless authorised by Volkswagen AG. Volkswagen AG does not guarantee or accept any liability with respect to the correctness of information in this document. Copyright by Volkswagen AG.
satelettronica

– Unclip retaining clip -2- under retaining lug -3- and lock.
– Reconnect connector -1-.
– Fit sealing cap.
– Install gas discharge bulb control unit ⇒ page 105 .
– Install headlight ⇒ page 88 .
– Check function of headlight.
– Check headlight settings and adjust if necessary ⇒ Maintenance ; Booklet ; Descriptions of work .

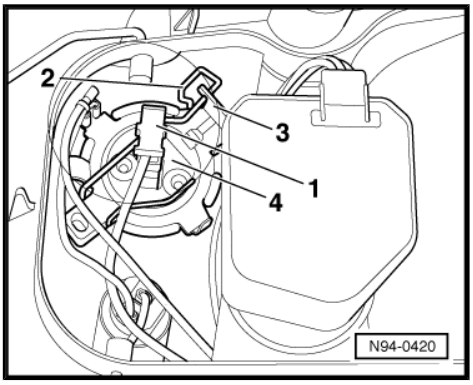

3.3.3 Renewing side light bulb

Removing:

– Disconnect battery ⇒ page 4 .
– Remove headlight ⇒ page 88 .
– Remove gas discharge bulb control unit ⇒ page 105 .
– Unscrew bolt -1- and remove cover cap -2-.

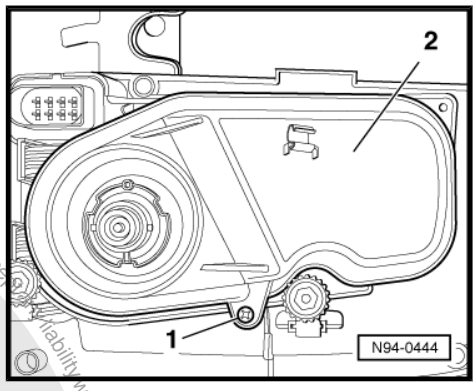

– Pull holder with bulb on connector out of reflector -arrow-.

Installing:

Note

Do not touch glass envelope when fitting a new bulb. Fingers leave traces of grease on the glass envelope, which evaporate when the bulb is switched on and cause the glass envelope to cloud over.

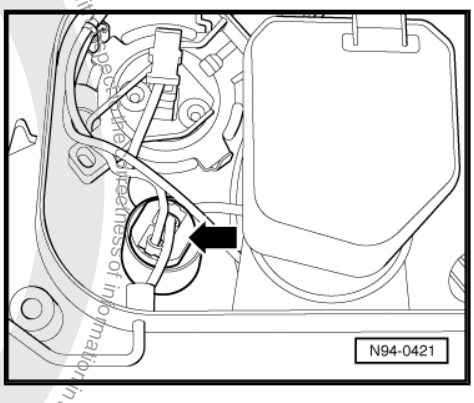

– After changing bulb, push bulb with holder into reflector onto stop.
– Fit sealing cap.
– Install gas discharge bulb control unit ⇒ page 105 .
– Install headlight ⇒ page 88 .
– Check function of headlight.
– Check headlight settings and adjust if necessary ⇒ Maintenance ; Booklet ; Descriptions of work .

Copyright by Volkswagen AG. Volkswagen AG does not guarantee or accept any liability with respect to the correctness of information in this document. Copying or passing on to others, in whole or in part, is not permitted unless authorised by Volkswagen AG. Volkswagen AG does not guarantee or accept any liability with respect to the correctness of information in this document. Copyright by Volkswagen AG.
satelettronica

3.4 Removing and installing headlight range control motor for headlights with gas discharge bulb

Note

- *The control motor can only be removed and installed when the headlight housing has been removed.*
- *If control motors are renewed or removed and installed, the headlight adjustment must be checked and adjusted with adjusting device, if necessary ⇒ Maintenance ; Booklet ; Descriptions of work .*

Removing:

– Disconnect battery ⇒ page 4 .

– Remove headlight ⇒ page 88 .

– Remove gas discharge bulb control unit ⇒ page 105 .

– Unscrew bolt -1- and remove cover cap -2-.

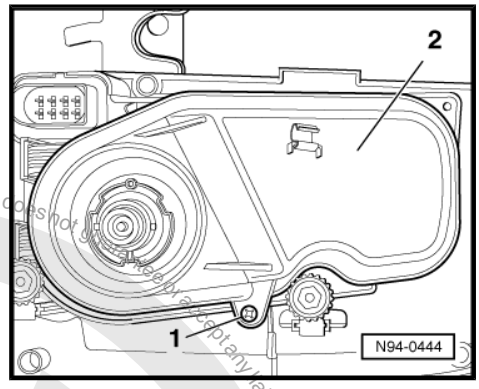

– Disconnect headlight range control motor connector -1-.

– Release left-hand headlight control motor -arrow- by turning to right and right-hand control motor by turning to left.

– Pull positioning pin ball head sideways out of guide on reflector.

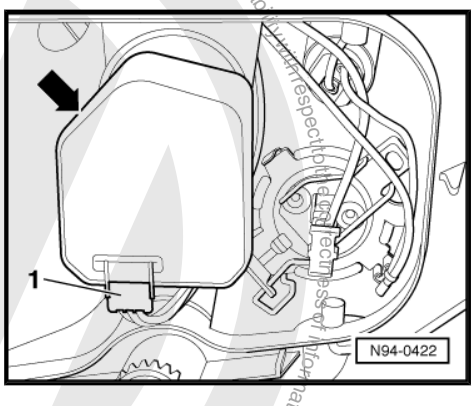

Installing:

– Carefully insert positioning pin of control motor -1- into ball head guide -2-. Push up reflector base plate when doing so.

– Lock control motor in position by turning.

– Reconnect connectors.

– Fit sealing cap.

– Install gas discharge bulb control unit ⇒ page 105 .

– Install headlight ⇒ page 88 .

– Check function of headlight.

– Check headlight settings and adjust if necessary ⇒ Maintenance ; Booklet ; Descriptions of work .

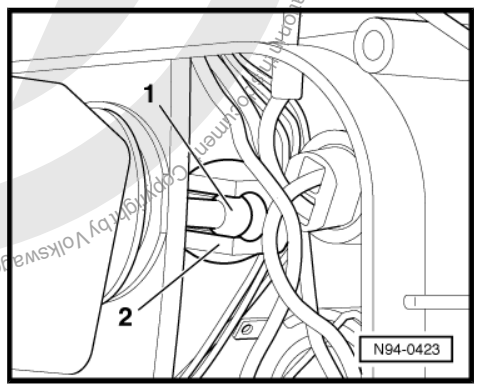

Protected by copyright. Copying for private or commercial purposes, in part or in whole, is not permitted unless authorised by Volkswagen AG. Volkswagen AG does not guarantee or accept any liability with respect to the correctness of information in this document. Copyright by Volkswagen AG.
satelettronica

3.5 Removing and installing gas discharge bulb control unit

Removing:

– Disconnect battery ⇒ page 4 .

– Remove headlight ⇒ page 88 .

– Remove rubber cover -arrow- on headlight housing.

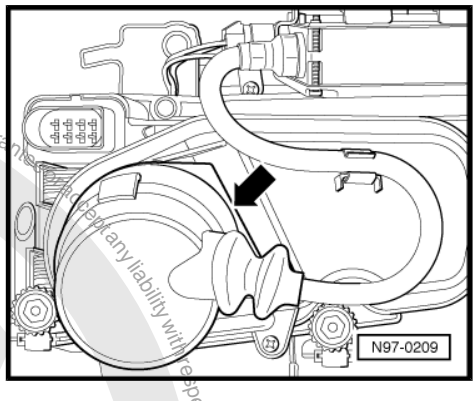

– Release connector -1- by turning in direction of arrow and disconnect.

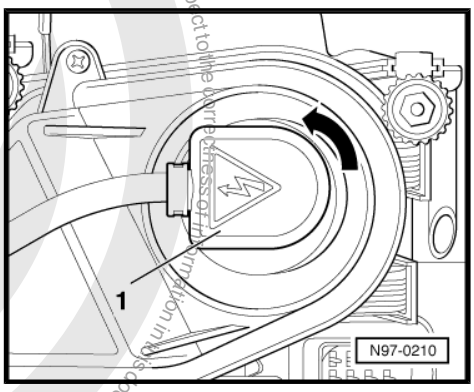

– Disconnect connector -1-, unscrew cross-head screws -2- and remove control unit -3-.

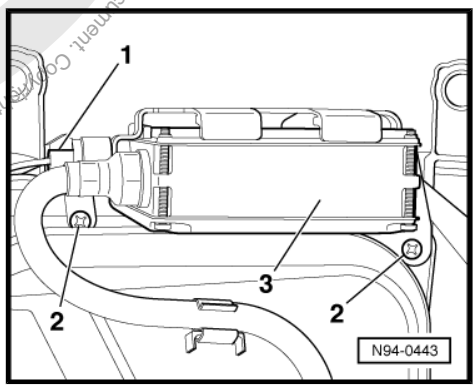

Installing:

Note

When renewing headlight range control unit, it must be coded ⇒ Electrical system; self-diagnosis; Rep. Gr. 01 ; Self-diagnosis of automatic headlight range control; Coding control unit .

– Tighten cross-head screws -2- and insert connector -1-.

– Lock connector -1- by turning in direction of arrow.

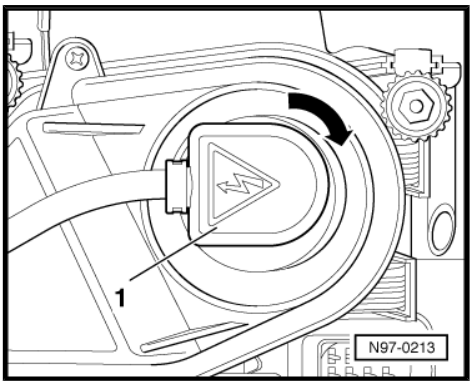

Protected by copyright. Copyright by Volkswagen AG.
Volkswagen AG does not guarantee any liability with respect to the correctness of information in this document. Copyright by Volkswagen AG. Protected by copyright. Copyright by Volkswagen AG. Volkswagen AG, in part or in whole, is not permitted unless authorised by Volkswagen AG. Volkswagen AG does not guarantee any liability with respect to the correctness of information in this document. Copyright by Volkswagen AG.
satelettronica

– Fit rubber cap -arrow- on headlight housing.
– Install headlight ⇒ page 88.
– Check headlight settings and adjust if necessary ⇒ Maintenance ; Booklet ; Descriptions of work .
– Check function of headlight.

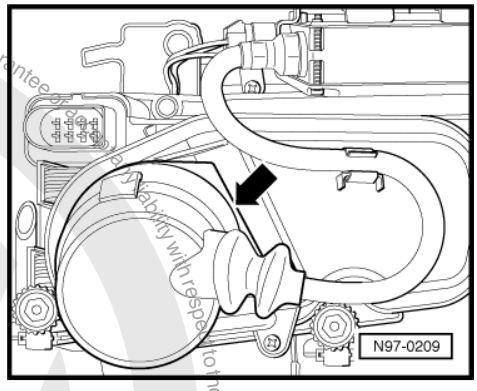

3.6 Repairing retaining tabs on headlight

Note

- *The prerequisite for repairing is that the headlight housing is not further damaged.*
- *To disconnect and reconnect the battery, the procedure described in the workshop manual should be strictly adhered to ⇒ page 4 .*
- *When the battery is reconnected, check the vehicle equipment (radio, clock, window regulators) as per Workshop Manual and/or the Owner's Manual.*
- *The left headlight is shown in the following illustration. On right headlight the components are a mirror image.*

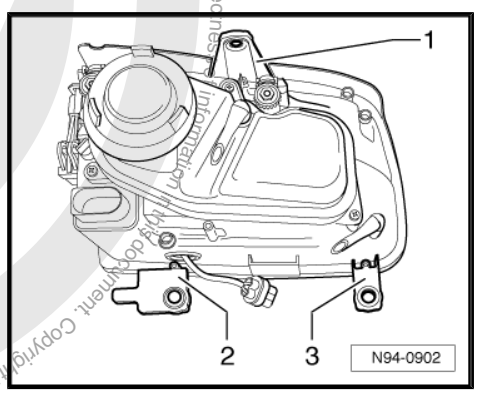

1 - Repairing upper retaining tab ⇒ page 106
2 - Repairing lower left retaining tab ⇒ page 107
3 - Repairing lower right retaining tab ⇒ page 107

3.6.1 Repairing upper retaining tab

– Disconnect battery ⇒ page 4 .
– Remove headlight ⇒ page 88 .
– Insert reinforcing ring -1- in direction of arrow into replacement part retaining tab -2-.
– Sand headlight retaining tab base on headlight down flat at breakage point.

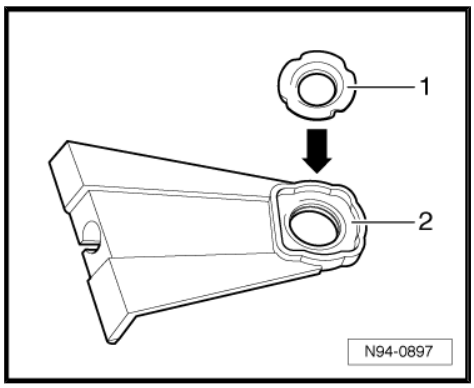

Copyright by Volkswagen AG. Volkswagen AG does not guarantee or assume any liability with respect to the correctness of information in this document. Copyright by Volkswagen AG.
satelettronica

– Position replacement part retaining tab -2- on headlight retaining tab base -3- and secure with bolt -1-.
– Install headlight ⇒ page 88 .
– Check headlight settings and adjust if necessary ⇒ Maintenance ; Booklet ; Descriptions of work .
– Check function of headlight.

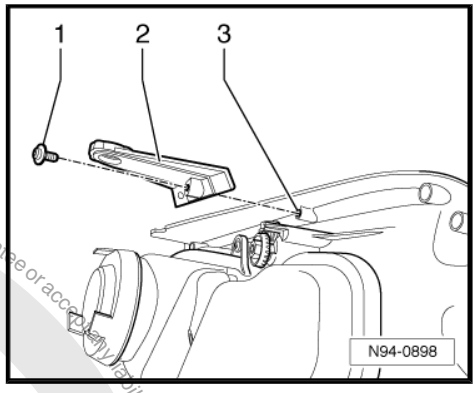

3.6.2 Repairing lower left retaining tab

– Disconnect battery ⇒ page 4 .
– Remove headlight ⇒ page 88 .

Note

The form of the retaining tab of the repair kit differs from the form of the original.

– Insert reinforcing ring -1- in direction of arrow into replacement part retaining tab -2-.
– Sand headlight retaining tab base on headlight down flat at breakage point.

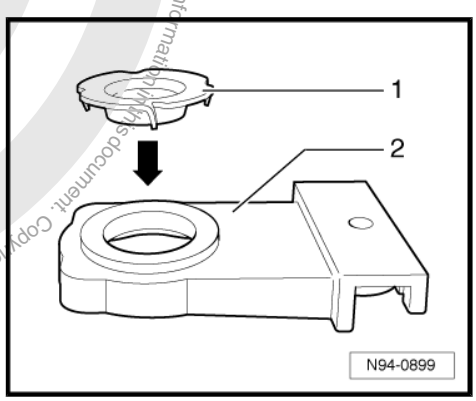

– Position replacement part retaining tab -2- on headlight retaining tab base -3- and secure with bolt -1-.
– Install headlight ⇒ page 88 .
– Check headlight settings and adjust if necessary ⇒ Maintenance ; Booklet ; Descriptions of work .
– Check function of headlight.

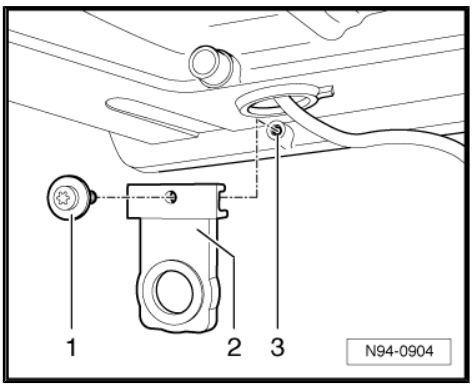

3.6.3 Repairing lower right retaining tab

– Disconnect battery ⇒ page 4 .
– Remove headlight ⇒ page 88 .

Protected by copyright. Copying for private or commercial purposes, in part or in whole, is not permitted unless authorised by Volkswagen AG. Volkswagen AG does not guarantee or accept any liability with respect to the correctness of information in this document. Copyright by Volkswagen AG.
satelettronica

– Insert reinforcing ring -1- in direction of arrow into replacement part retaining tab -2-.
– Sand headlight retaining tab base on headlight down flat at breakage point.

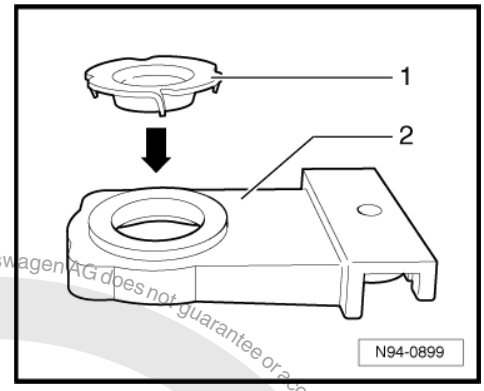

– Position replacement part retaining tab -2- on headlight retaining tab base -3- and secure with bolt -1-.
– Install headlight ⇒ page 88 .
– Check headlight settings and adjust if necessary ⇒ Maintenance ; Booklet ; Descriptions of work .
– Check function of headlight.

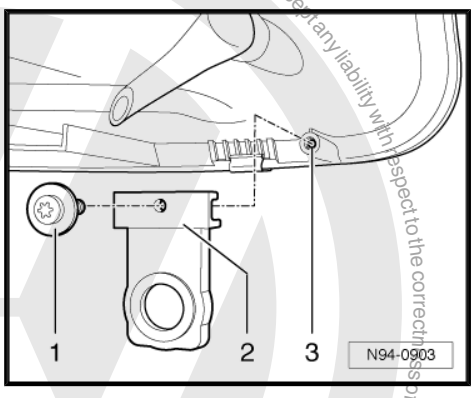

3.7 Adjusting headlights

3.7.1 Adjusting headlights with gas discharge bulb

⇒ Maintenance ; Booklet ; Descriptions of work:

Protected by copyright. Copyright by Volkswagen AG.
Copy for private and commercial purposes, in part or in whole, is not permitted unless authorised by Volkswagen AG. Volkswagen AG does not guarantee or accept any liability with respect to the correctness of information in this document.
satelettronica

4 Fog lights

4.1 Removing and installing fog lights, vehicles ▸ 09.99

4.1.1 Vehicles with small bumper

Removing:

– Switch off ignition and all electrical consumers and remove ignition key.

– Remove skirt ⇒ General body repairs, exterior; Rep. Gr. 50 ; Body, front .

– Remove securing bolts -arrows-.

– Pull fog light housing out of bumper and disconnect connector.

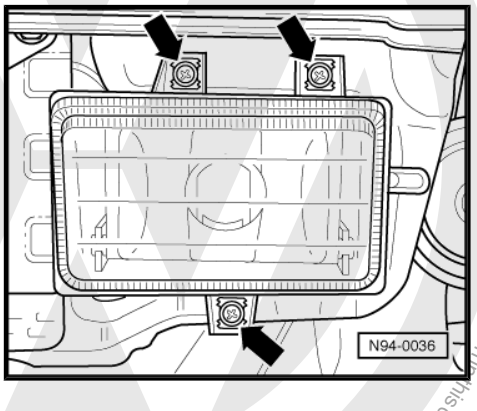

Installing:

Installation is carried out in the reverse order. When installing observe the following:

– Check fog light settings and adjust if necessary ⇒ Maintenance ; Booklet ; Descriptions of work .

– Check function of headlight.

4.1.2 Vehicles with large bumper

Removing:

– Switch off ignition and all electrical consumers and remove ignition key.

– Unclip cover -1-.

– Remove bumper ⇒ General body repairs, exterior; Rep. Gr. 63 ; Front bumper .

– Remove securing bolts -arrows-.

– Pull fog light housing out backwards of bumper and disconnect connector.

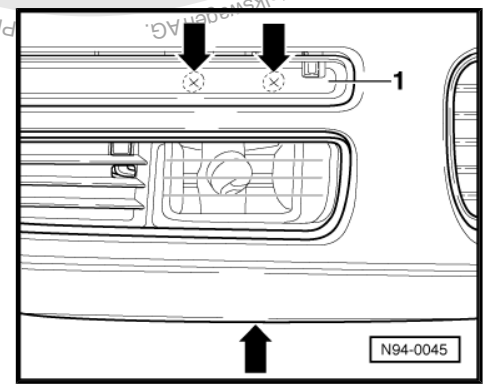

Installing:

Installation is carried out in the reverse order. When installing observe the following:

– Check fog light settings and adjust if necessary ⇒ Maintenance ; Booklet ; Descriptions of work .

– Check function of headlight.

4.2 Removing and installing fog lights, vehicles 10.99 ▸

Removing:

– Switch off ignition and all electrical consumers and remove ignition key.

Protected by copyright. Copying for private or commercial purposes, in part or in whole, is not permitted unless authorised by Volkswagen AG. Volkswagen AG does not guarantee or accept any liability with respect to the correctness of information in this document. Copyright by Volkswagen AG.
satelettronica

– Unscrew cross-head screw -arrow- and remove trim -1-.

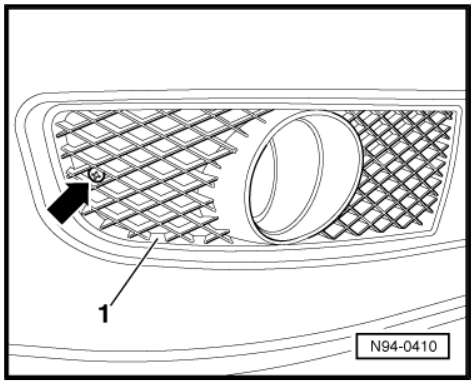

– Remove securing bolts -arrows-.

– Pull fog light housing forwards out of bumper and disconnect connector.

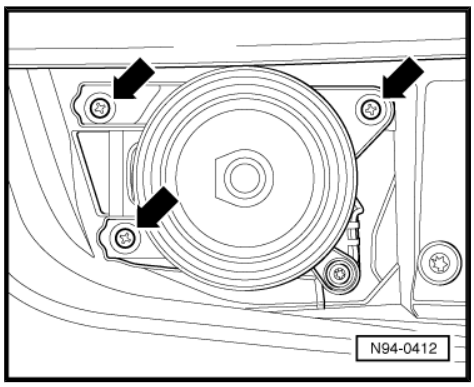

Installing:

Installation is carried out in the reverse order. When installing observe the following:

– Check fog light settings and adjust if necessary ⇒ Maintenance ; Booklet ; Descriptions of work .

– Check function of headlight.

4.3 Removing and installing fog light bulb, vehicles ▸ 09.99

Removing:

– Turn cover cap in direction of arrow and remove.

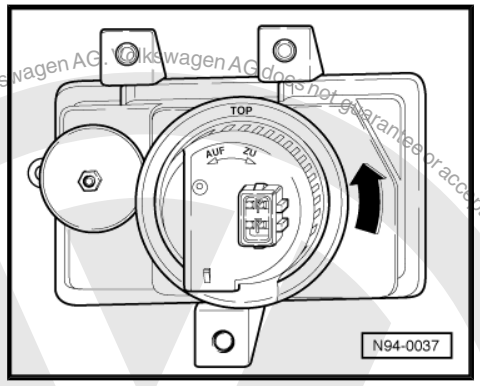

Protected by copyright. Copying for private or commercial purposes, in part or in whole, is not permitted unless authorised by Volkswagen AG. Volkswagen AG does not guarantee or accept any liability with respect to the correctness of information in this document. Copyright by Volkswagen AG.
satelettronica

– Disconnect connector -1- of H3 halogen bulb (12 V/55 W) in cover cap.
– Unclip retaining clip -2- over retaining lugs -3- and swing out.
– Pull bulb out of housing.

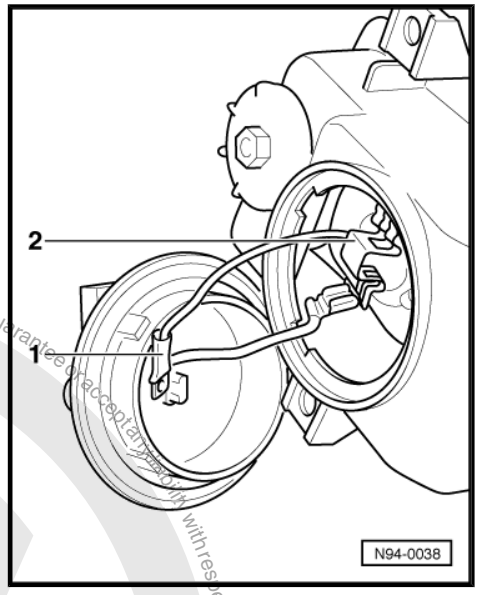

Installing:

Installation is carried out in the reverse order. When installing observe the following:

Note

Do not touch glass envelope when fitting a new bulb. Fingers leave traces of grease on the glass envelope, which evaporate when the bulb is switched on and cause the glass envelope to cloud over.

– Insert bulb so that recess in bulb carrier aligns with guide lug of housing.
– Check fog light settings and adjust if necessary ⇒ Maintenance ; Booklet ; Descriptions of work .
– Check function of headlight.

4.4 Removing and installing fog light bulb, vehicles 10.99 ▸

Removing:

– Disconnect connector on fog light.
– Release spring clip -arrow- and remove cover cap.

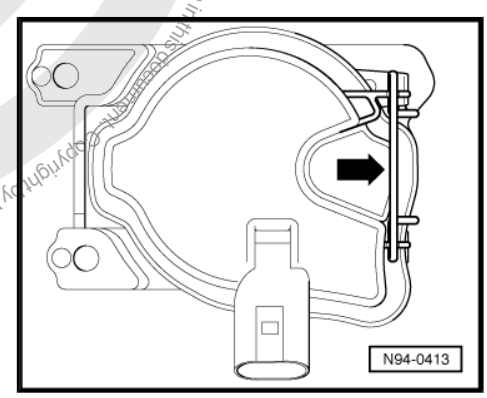

Protected by copyright. Copying for private or commercial purposes, in part or in whole, is not permitted unless authorised by Volkswagen AG. Volkswagen AG does not guarantee or accept any liability with respect to the correctness of information in this document. Copyright by Volkswagen AG.
satelettronica

– Disconnect connectors -1- of H7 halogen bulb (12 V/55 W).
– Unclip retaining clip -2- over retaining lugs -3- and swing out.
– Pull bulb out of housing.

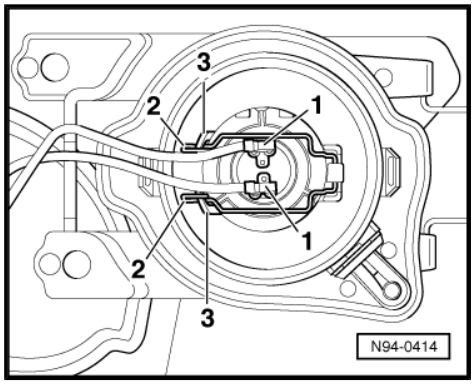

Installing:

Installation is carried out in the reverse order. When installing observe the following:

Note

Do not touch glass envelope when fitting a new bulb. Fingers leave traces of grease on the glass envelope, which evaporate when the bulb is switched on and cause the glass envelope to cloud over.

– Insert bulb so that recess in bulb carrier aligns with guide lug of housing.
– Check fog light settings and adjust if necessary ⇒ Maintenance ; Booklet ; Descriptions of work .
– Check function of headlight.

Protected by copyright. Copying for private or commercial purposes, in part or in whole, is not permitted unless authorised by Volkswagen AG. Volkswagen AG does not guarantee or accept any liability with respect to the correctness of information in this document. Copyright by Volkswagen AG.

satelettronica

5 Front turn signals

5.1 Removing and installing front turn signals, vehicles ▸ 09.99

Removing:

– Remove securing bolt -arrow-.
– Pull turn signal out forwards.
– Disconnect connector.

Installing:

– Reconnect connector.

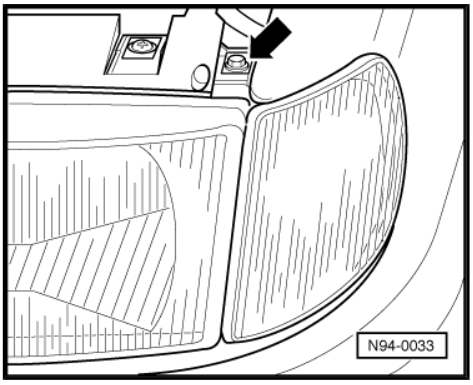

– Slide turn signal into the aperture in the wing.

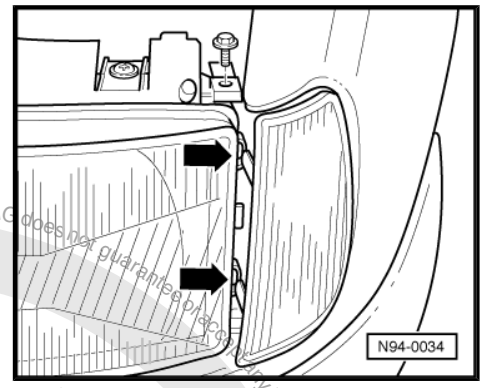

Note

The lugs on the turn signal must locate in the guides -arrows- of the headlight housing.

– Install securing bolt.

5.2 Removing and installing front turn signals, vehicles 10.99 ▸

Removing:

– Release bolt -arrow- by turning it anti-clockwise and remove upwards.

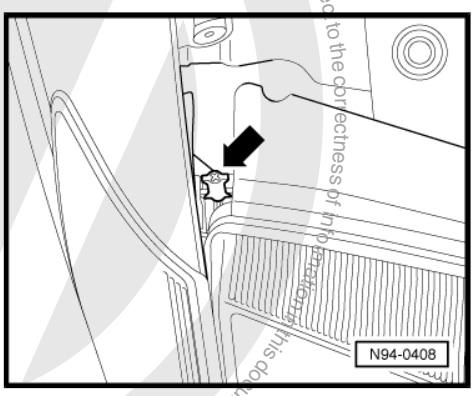

Note

Spring for securing turn signal is slackened when bolt is pulled upwards.

– Pull turn signal out forwards.

Protected by copyright. Copying for private or commercial purposes, in part or in whole, is not permitted unless authorised by Volkswagen AG. Volkswagen AG does not guarantee or accept any liability with respect to the correctness of information in this document. Copyright by Volkswagen AG.
satelettronica

– Disconnect connector -arrow-.

Installing:

– Reconnect connector.

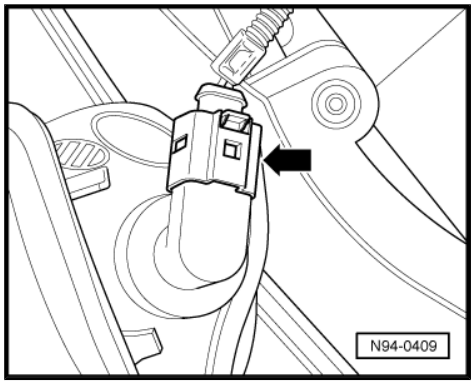

– Slide turn signal into the aperture in the wing.

Note

The lugs -1- on the turn signal must be inserted in the guides -2- of the headlight housing.

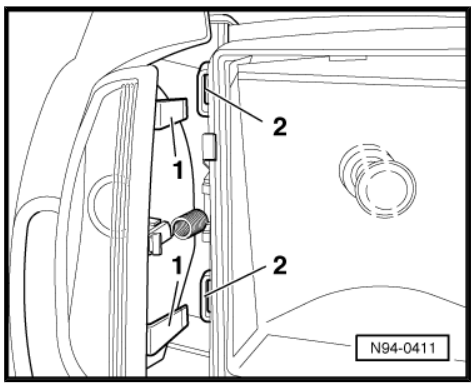

– Engage bolt -arrow- by pushing it down and turning it clockwise.

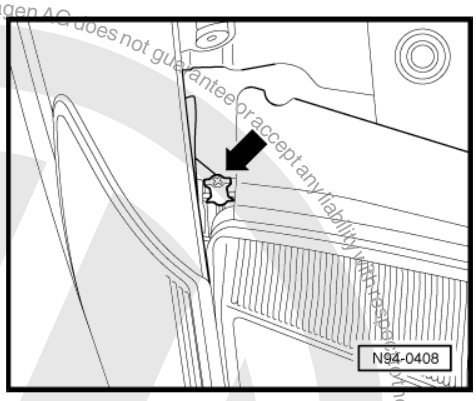

Protected by copyright. Copying for private or commercial purposes, in part or in whole, is not permitted unless authorised by Volkswagen AG. Volkswagen AG does not guarantee or accept any liability with respect to the correctness of information in this document. Copyright by Volkswagen AG.
satelettronica

5.3 Renewing turn signal bulb, vehicles ▸ 09.99

Removing:

– Turn bulb carrier in direction of arrow and pull out of housing.

– Remove bulb from holder.

Installing:

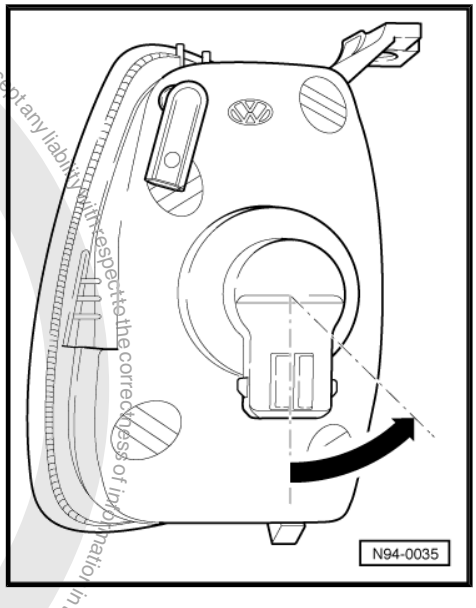

Note

Do not touch glass envelope when fitting a new bulb. Fingers leave traces of grease on the glass envelope, which evaporate when the bulb is switched on and cause the glass envelope to cloud over.

Ensure, when installing, that the bulb carrier engages correctly in the bulb housing when turning opposite to direction of arrow.

5.4 Renewing turn light signal bulb, vehicles 10.99 ▸

Removing:

– Remove front turn signal ⇒ page 113 .

Note

The turn signal connector does not have to be released when renewing the bulb.

– Turn bulb carrier in direction of arrow and pull out of housing.

– Remove bulb from holder.

Installing:

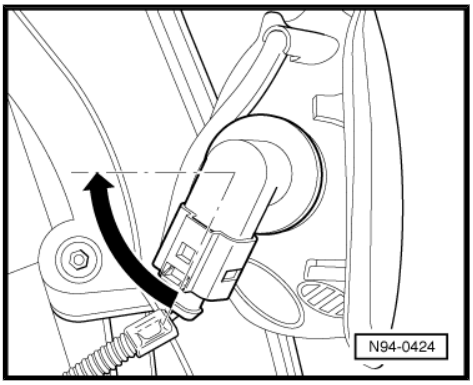

Note

Do not touch glass envelope when fitting a new bulb. Fingers leave traces of grease on the glass envelope, which evaporate when the bulb is switched on and cause the glass envelope to cloud over.

Ensure, when installing, that the bulb carrier engages correctly in the bulb housing when turning opposite to direction of arrow.

Protected by copyright. Copying for private or commercial purposes, in part or in whole, is not permitted unless authorised by Volkswagen AG. Volkswagen AG does not guarantee or accept any liability with respect to the correctness of information in this document. Copyright by Volkswagen AG.
satelettronica

6 Turn signal repeater

Protected by copyright. Copying for private or commercial purposes, in part or in whole, is not permitted unless authorised by Volkswagen AG. Volkswagen AG does not guarantee or accept any liability with respect to the correctness of information in this document. Copyright by Volkswagen AG.

6.1 Removing and installing turn signal repeater

Removing:

Note

Extreme caution must be exercised when removing the turn signal repeater, as removing is only possible in one direction and, when installed, it is not possible to recognise the side of the turn signal on which the mounting point or the spring clip are located. Attempting to lever out the light on the spring clip side by force runs the risk of damaging the turn signal or the vehicle paintwork.

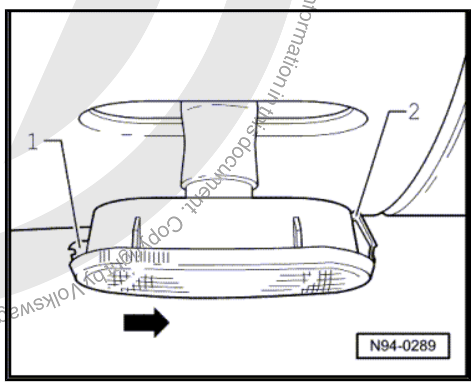

– Press turn signal with a suitable tool on the mounting side -1- carefully in direction of arrow against the force of the spring clip -2- on the opposite side, and remove (protect paintwork surface with adhesive tape first if necessary).
– Pull rubber holder with push-fit bulb off bulb housing.
– Pull push-fit bulb (12 V/5 W) out of holder (do not turn).

Installing:

Note

Do not touch glass envelope when fitting a new bulb. Fingers leave traces of grease on the glass envelope, which evaporate when the bulb is switched on and cause the glass envelope to cloud over.

– Fit rubber holder with push-fit bulb onto bulb housing.
– Insert turn signal in wing.
– Check function of turn signal.

satelettronica

7 Tail lights

7.1 Assembly overview of tail light, vehicles ▸ 09.99

Note

- *To disconnect and reconnect the battery, the procedure described in the workshop manual should be strictly adhered to* ⇒ page 4 .
- *If the vehicle has a radio with anti-theft coding, obtain code before disconnecting battery.*

1 - Housing

2 - Rear fog light bulb

12 V / 21 W

Only installed on left-hand side

3 - Tail light bulb

12 V / 5 W

4 - Brake light bulb

12 V / 21 W

5 - Turn signal bulb

12 V / 21 W

6 - Bulb carrier

❑ Removing and installing ⇒ page 118

7 - Seal

8 - M5 hexagon nut

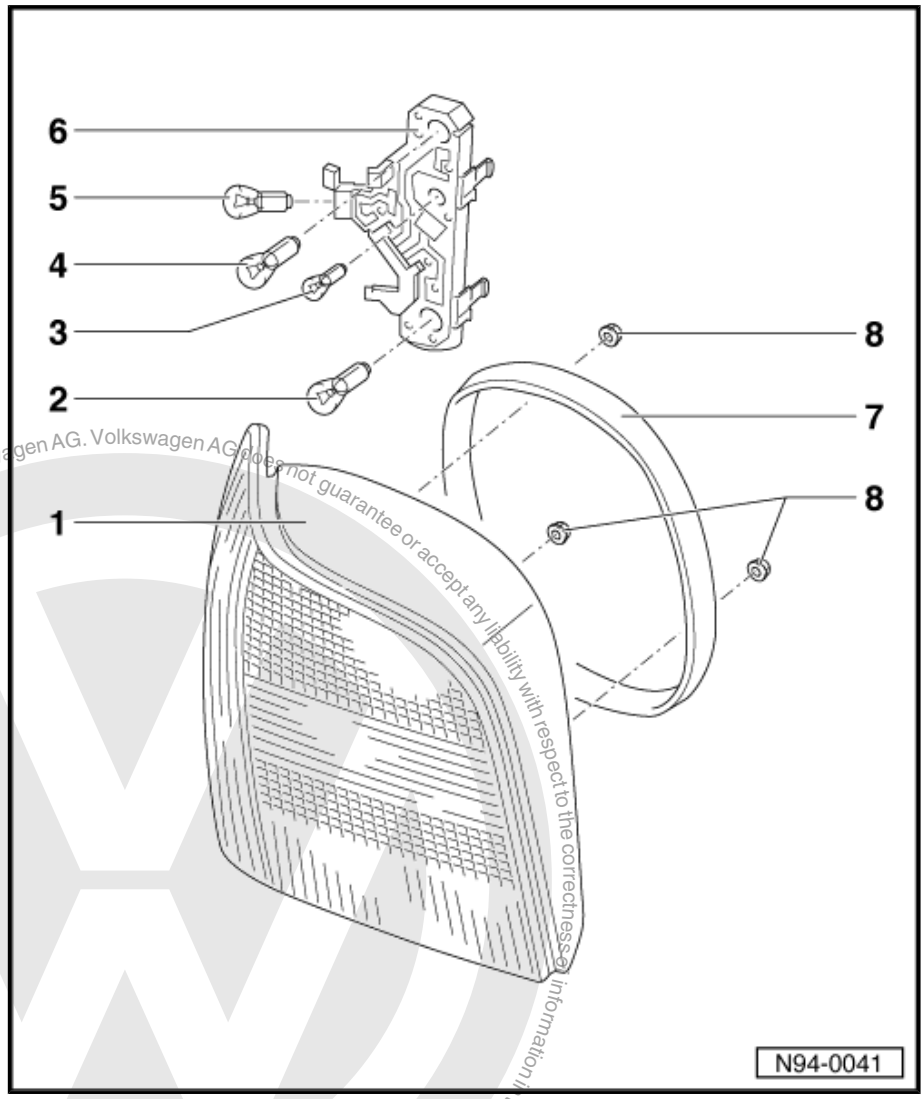

Protected by copyright. Copyright for private or commercial purposes, in part or in whole, is not permitted unless authorised by Volkswagen AG. Volkswagen AG does not guarantee or accept any liability with respect to the correctness of information in this document. Copyright by Volkswagen AG.
satelettronica

7.2 Removing and installing tail light, vehicles ▸ 09.99

Removing:

– Remove rear right-hand or left-hand luggage compartment trim ⇒ General body repairs, interior; Rep. Gr. 70 .

– Remove bulb carrier -1- ⇒ page 118 .

– Unscrew securing nuts -arrows- and remove tail light housing.

Installing:

– Insert tail light housing into body aperture.

– Tighten securing nuts (3 Nm).

– Installing bulb carrier ⇒ page 118

– Remove rear right-hand or left-hand luggage compartment trim.

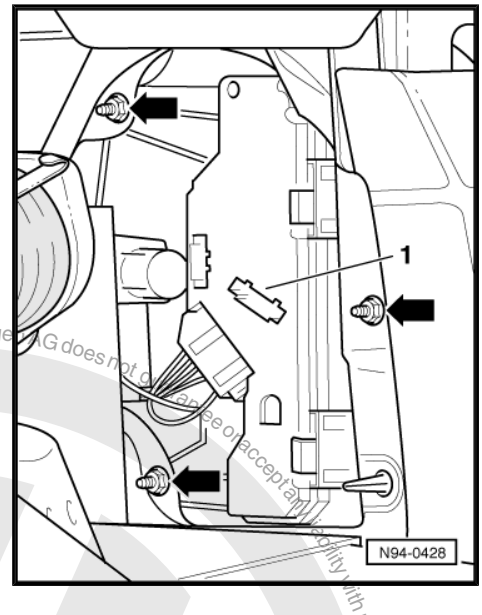

7.3 Removing and installing bulb carrier for tail light, vehicles ▸ 09.99

Removing:

– Release retaining tabs -arrows- and take out bulb carrier.

– Disconnect connector.

Installing:

Installation is carried out in reverse order of removal.

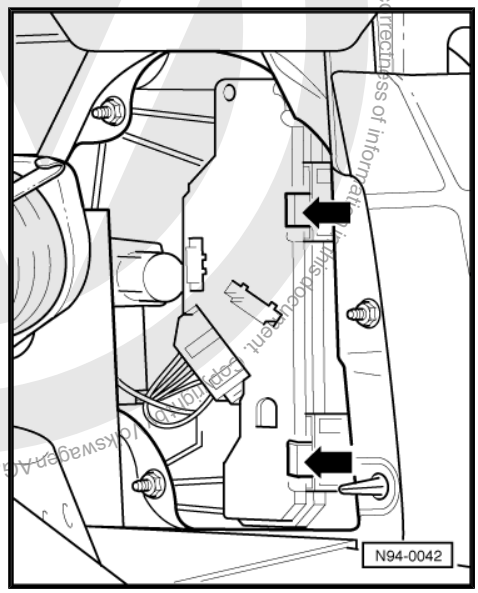

Protected by copyright. Copying for private or commercial purposes, in part or in whole, is not permitted unless authorised by Volkswagen AG. Volkswagen AG does not guarantee or accept any liability with respect to the correctness of information in this document. Copyright by Volkswagen AG.

satelettronica

7.4 Assembly overview of tail light, vehicles 10.99 ▸

Note

- *To disconnect and reconnect the battery, the procedure described in the workshop manual should be strictly adhered to* *⇒ page 4* *.*
- *If the vehicle has a radio with anti-theft coding, obtain code before disconnecting battery.*

1 - Housing

❑ Removing and installing ⇒ page 119

2 - Rear fog light bulb

12 V / 21 W

Only installed on left-hand side

3 - Tail light bulb

12 V / 5 W

4 - Turn signal bulb

12 V / 21 W

5 - Brake light bulb

12 V / 21 W

6 - Bulb carrier

❑ Removing and installing ⇒ page 120

7 - M5 hexagon nut

8 - Seal

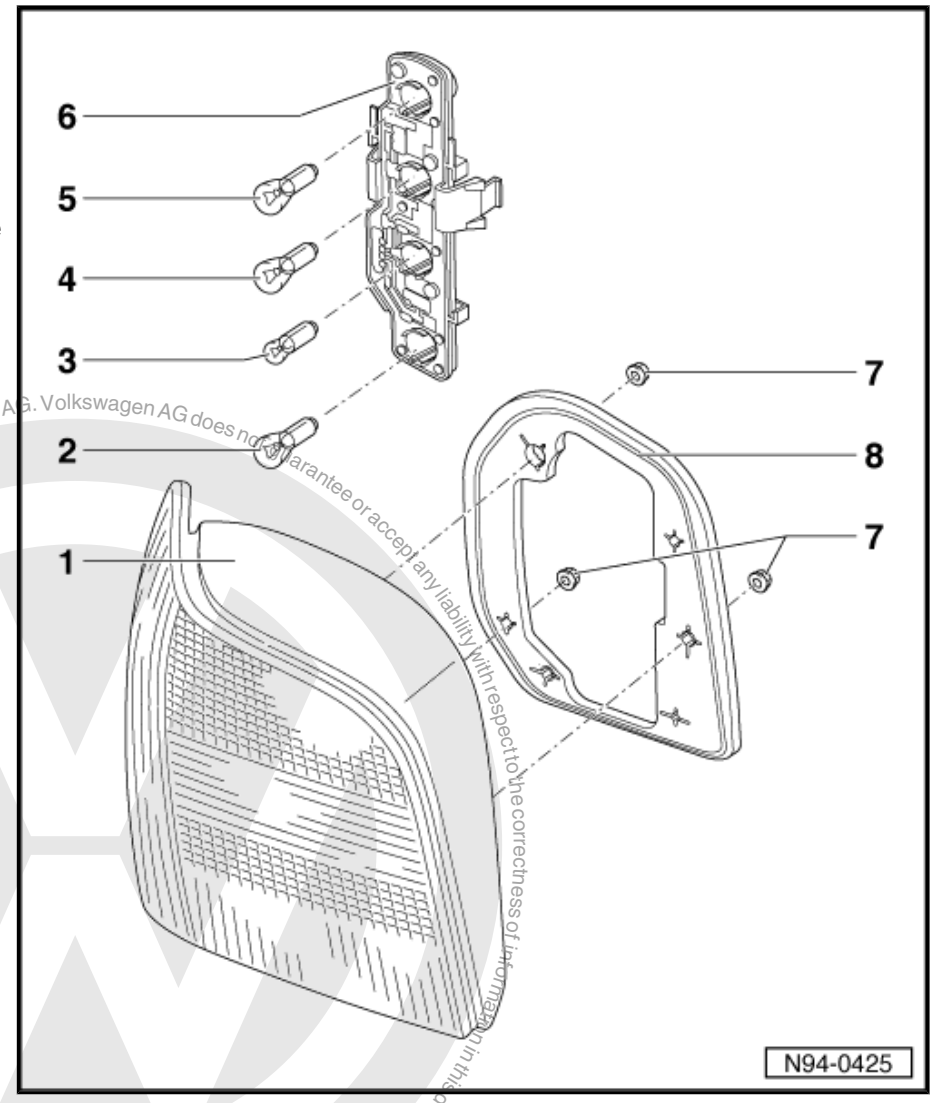

7.5 Removing and installing tail light, vehicles 10.99 ▸

Removing:

– Remove rear right-hand or left-hand luggage compartment trim ⇒ General body repairs, interior; Rep. Gr. 70 .

Protected by copyright. Copyright by Volkswagen AG. Copying for private or commercial purposes, in part or in whole, is not permitted unless authorised by Volkswagen AG. Volkswagen AG does not guarantee or accept any liability with respect to the correctness of information in this document.
satelettronica

– Remove bulb carrier -1- ⇒ page 120 .
– Unscrew securing nuts -arrows- and remove tail light housing.

Installing:

– Insert tail light housing into body aperture.
– Tighten securing nuts (3 Nm).
– Installing bulb carrier ⇒ page 120
– Remove rear right-hand or left-hand luggage compartment trim.

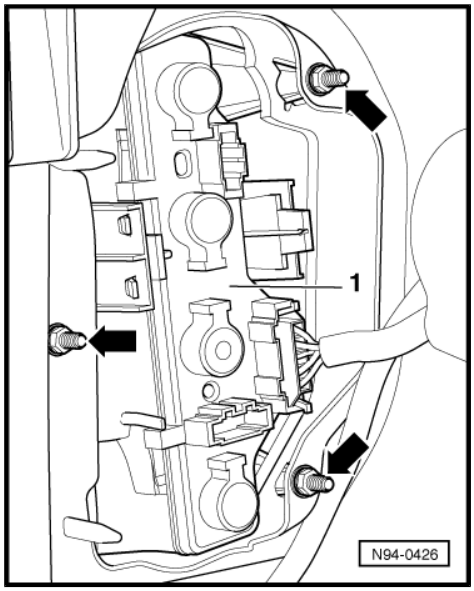

7.6 Removing and installing bulb carrier for tail light, vehicles 10.99 ▸

Removing:

– Disconnect connector.
– Release retaining tabs -arrows- and take out bulb carrier.

Installing:

Installation is carried out in reverse order of removal.

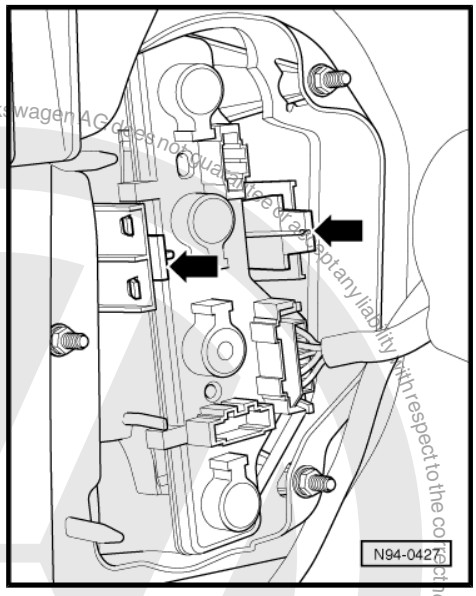

Protected by copyright. Copying for private or commercial purposes, in part or in whole, is not permitted unless authorised by Volkswagen AG. Volkswagen AG does not guarantee or assume any liability with respect to the correctness of information in this document. Copyright by Volkswagen AG.
satelettronica

8 Number plate light

8.1 Removing and installing number plate light, vehicles ▸ 09.99

Removing:

– Using a suitable tool, carefully lever number plate out until retaining tab -arrow- releases.

– Disconnect connector.

Installing:

– Reconnect connectors.

– Insert number plate light into bumper.

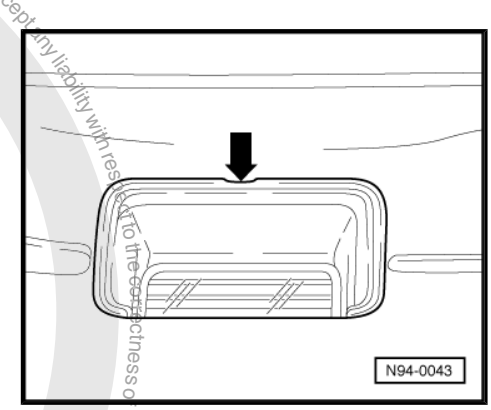

8.1.1 Removing and installing number plate light bulb

– Remove number plate light ⇒ page 121 .

– Turn coupling in direction of arrow and pull out of housing.

– Pull out glass-base bulb (12V/5W), do not turn.

When installing, turn coupling until it engages (opposite direction of arrow).

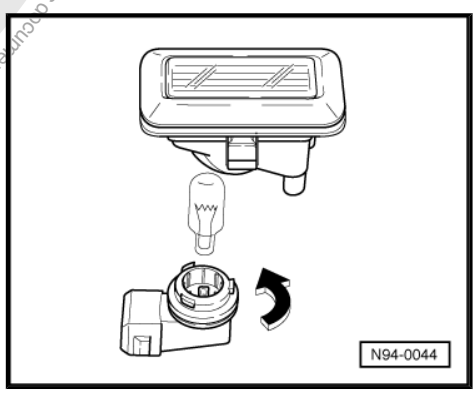

8.2 Removing and installing number plate light, vehicles 10.99 ▸

Removing:

– Remove cross-head screws -arrows- for appropriate number plate light.

– Remove lens with bulb.

– Take out bulb (12 volts / 5 watts).

Installing:

Installation is carried out in reverse order of removal.

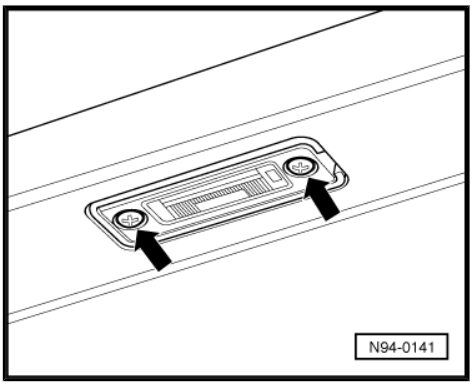

Protected by copyright. Copyright by Volkswagen AG.
Volkswagen AG. Volkswagen AG does not guarantee or accept any liability with respect to the correctness of information in this document. Copyright by Volkswagen AG. Protected by copyright. Copying for private or commercial purposes, in part or in whole, is not permitted unless authorised by Volkswagen AG.
satelettronica

Note

A small silver coloured anti-dazzle strip -arrow- is fitted in number plate light lens. When installing lens it must always be towards bumper.

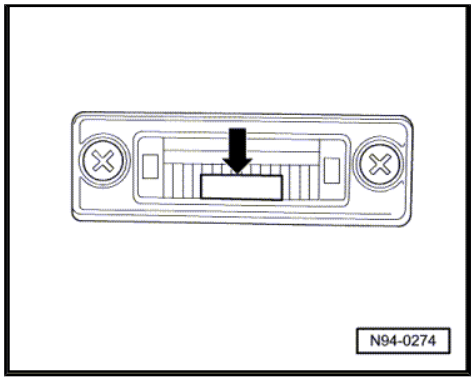

Protected by copyright. Copying for private or commercial purposes, in part or in whole, is not permitted unless authorised by Volkswagen AG. Volkswagen AG does not guarantee or accept any liability with respect to the correctness of information in this document. Copyright by Volkswagen AG.

satelettronica

9 Additional brake light

9.1 Assembly overview, vehicles ▸ 09.99

1 - Housing
- ❑ With lens

2 - Reflector

3 - Bulb carrier
- ❑ Removing and installing ⇒ page 124

4 - Bulb 12 V / 5 W

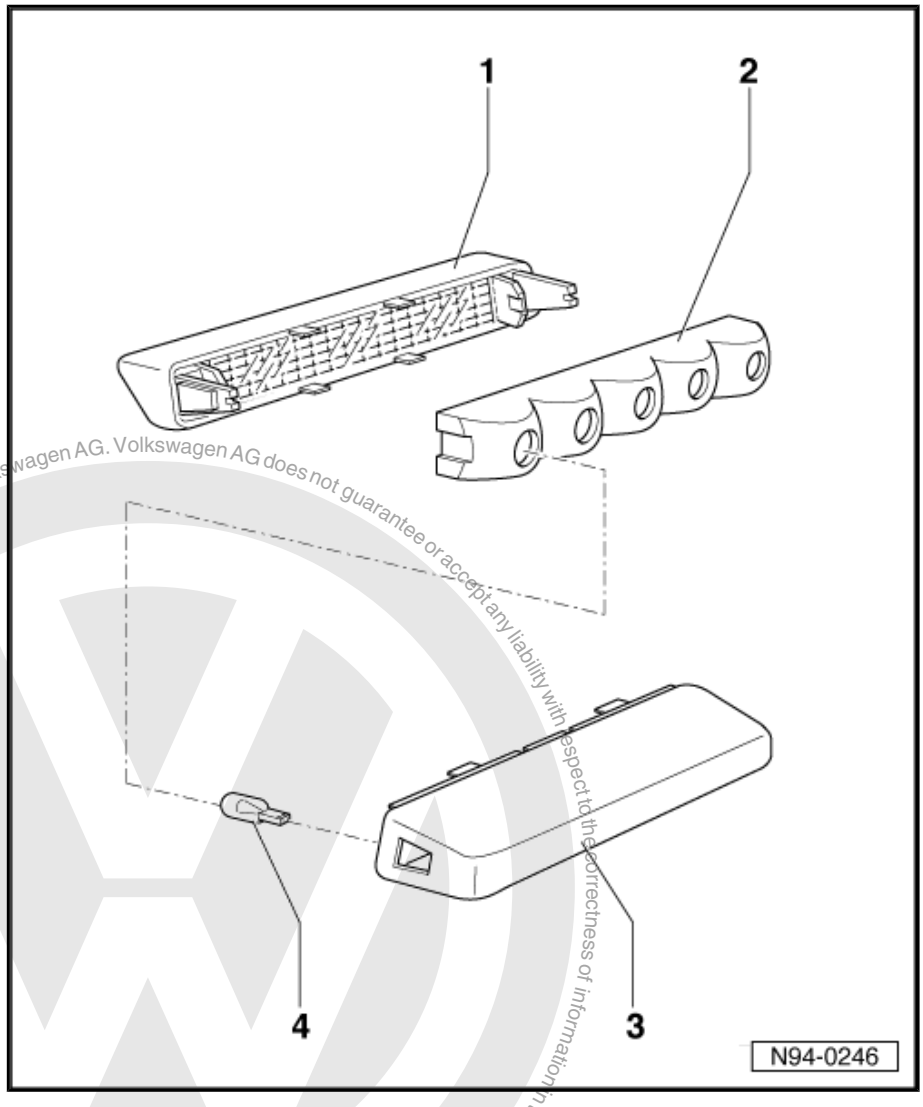

9.2 Removing and installing additional brake light, vehicles ▸ 09.99

The additional brake light is located on the rear window.

Protected by copyright. Copyright by Volkswagen AG. Volkswagen AG does not guarantee or accept any liability with respect to the correctness of information in this document. Copyright by Volkswagen AG. Copying for private or commercial purposes, in part or in whole, is not permitted unless authorised by Volkswagen AG.
satelettronica

9.2.1 Removing and installing bulb carrier

– Disconnect connector, press back retaining spring -arrows- and take out bulb carrier.

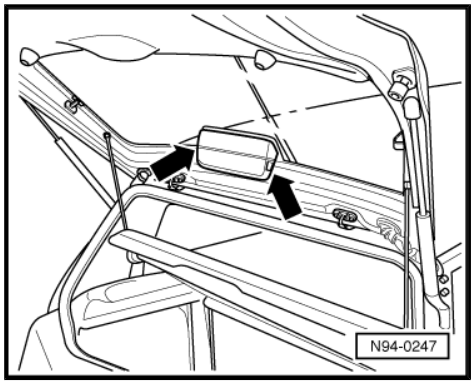

9.2.2 Removing and installing additional brake light

– Press back retaining springs and take housing with lens off rear window -arrows-.

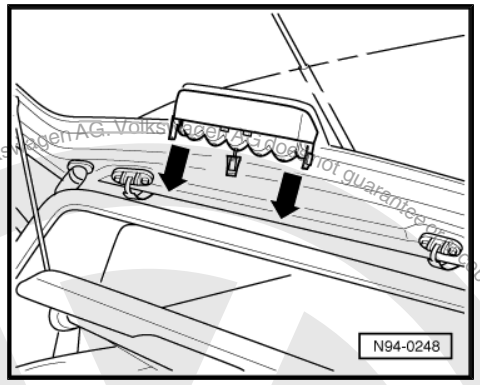

9.3 Removing and installing additional brake light, vehicles 10.99 ▸

Removing and installing additional brake light, Polo GTI 10.99 ▸
⇒ page 126

9.3.1 Removing additional brake light

– Pull off cover rubbers -arrows-.

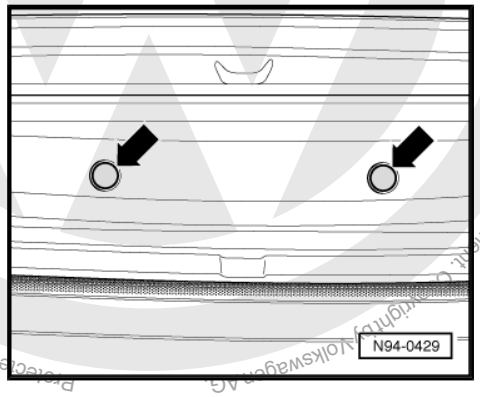

satelettronica

– Unclip fastener by pushing in direction of arrow.

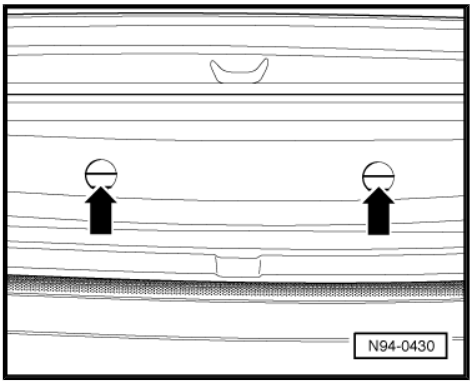

– Carefully pull out additional brake light -1- backwards and disconnect connector.

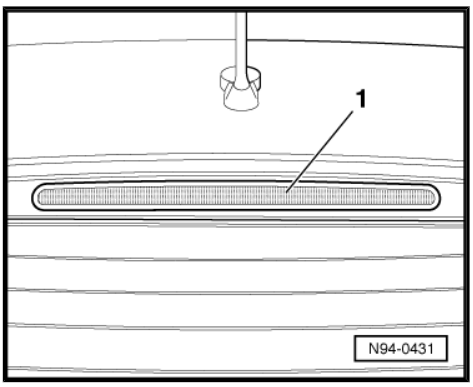

9.3.2 Install additional brake light

Installation is carried out in reverse order of removal.

Note

Retaining lugs of additional brake light -1- must engage in body cut-outs -2-.

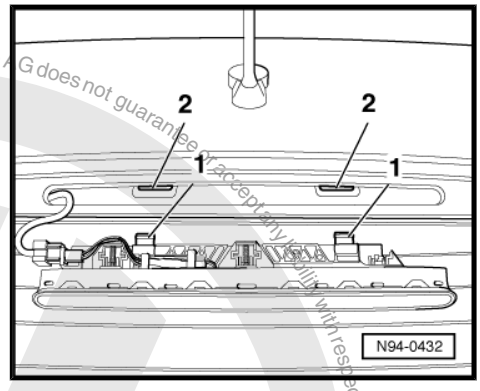

9.3.3 Removing and installing bulb carrier

– Unclip bulb along both long sides -arrows-.

Note

The bulb carrier features a circuit board with 20 soldered LEDs which are covered by a plastic strip. Changing an individual LED is not possible, the bulb carrier must be renewed completely in cases of repair.

Installation is carried out in the reverse sequence.

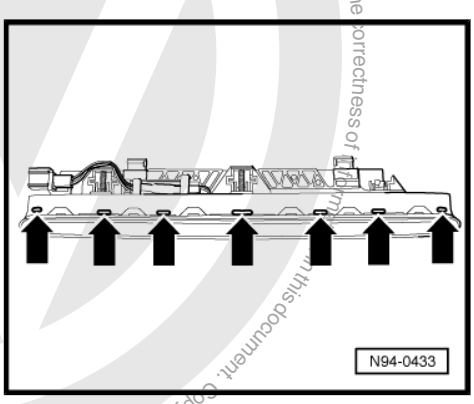

Protected by copyright. Copying for private or commercial purposes, in part or in whole, is not permitted unless authorised by Volkswagen AG. Volkswagen AG does not guarantee or accept any liability with respect to the correctness of this document. Copyright by Volkswagen AG.
satelettronica

9.4 Removing and installing additional brake light, Polo GTI 10.99 ▸

– Remove rear spoiler ⇒ General body repairs, exterior; Rep. Gr. 66 ; Spoilers .

– Unclip and disconnect connector for additional brake light.

– Remove Torx screws -arrows- and remove additional brake light from spoiler.

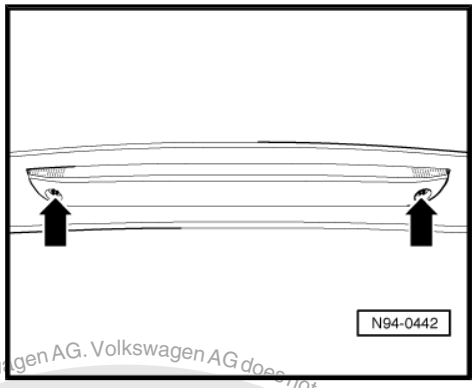

Note

The bulb carrier and the additional brake light are one unit.

The installation of the additional brake light is carried out in the reverse sequence.

Protected by copyright. Copying for private or commercial purposes, in part or in whole, is not permitted unless authorised by Volkswagen AG. Volkswagen AG does not guarantee or accept any liability with respect to the correctness of information in this document. Copyright by Volkswagen AG.
satelettronica

10 Steering column switch and ignition/ starter switch

10.1 Assembly overview of steering column, vehicles ▸ 09.99

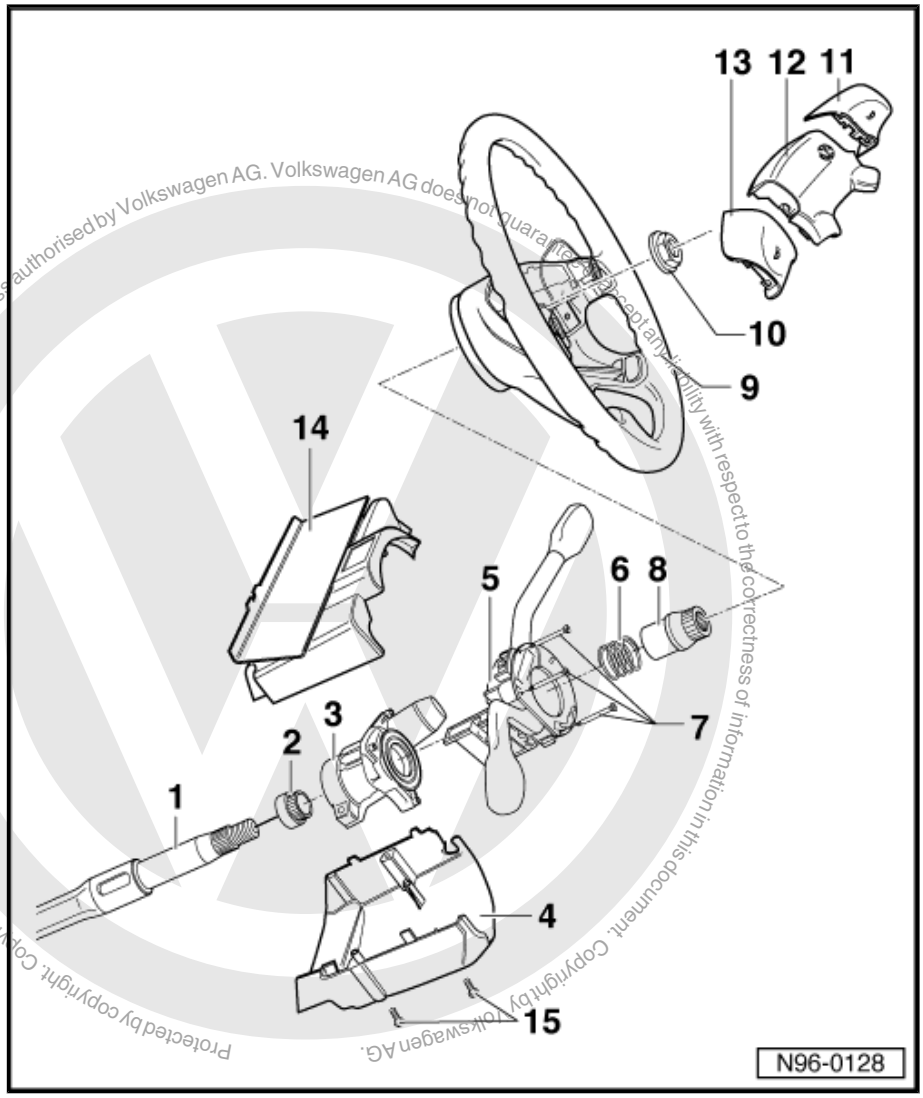

Protected by copyright. Copying for private or commercial purposes, in part or in whole, is not permitted unless authorised by Volkswagen AG. Volkswagen AG does not guarantee or accept any liability with respect to the correctness of information in this document. Copyright by Volkswagen AG.

satelettronica

Note

- *To disconnect and reconnect the battery, the procedure described in the workshop manual should be strictly adhered to* *⇒ page 4* *.*
- *If the vehicle has a radio with anti-theft coding, obtain code before disconnecting battery.*
- *Further information for assembling the steering column ⇒ Running gear, axles, steering; Rep. Gr. 48*
- *Instructions for working on vehicles fitted with an airbag ⇒ General body repairs, interior; Rep. Gr. 69 ; Airbag .*

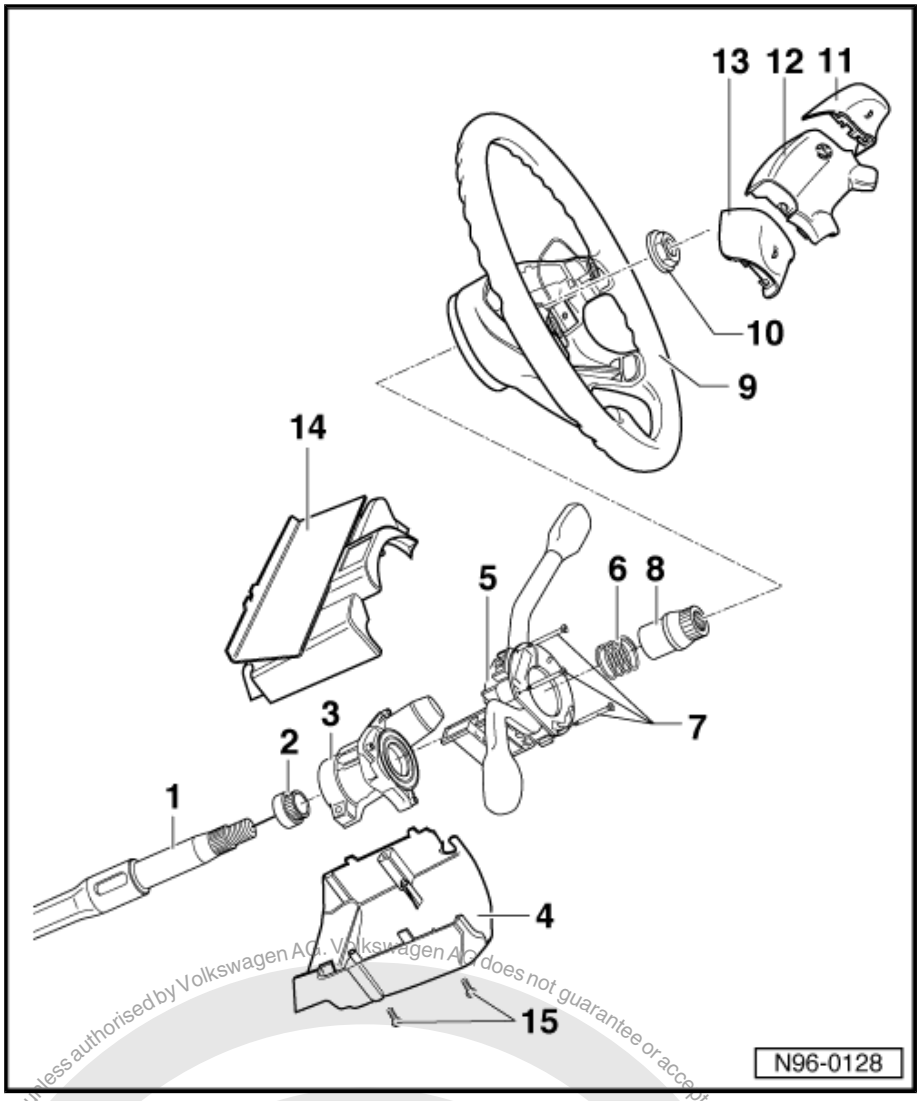

1 - Steering column

2 - Support ring

3 - Steering lock housing

- ❑ Removing and installing ⇒ page 134
- ❑ Removing and installing lock cylinder ⇒ page 134

4 - Trim - lower part

5 - Steering column switch

- ❑ For turn signals, main and dipped beam, head-light flasher, parking lights, windscreen wiper wash/wipe control and rear window wiper
- ❑ Removing ⇒ page 131 , removing and installing steering column switch

6 - Spring

7 - Steering column switch se-curing bolts

8 - Multi-point adapter sleeve

9 - Steering wheel

- ❑ Grease slip ring for horn plate ⇒ page 131

10 - Hexagon nut

- ❑ 50 Nm

11 - Cover cap for right horn plate

- ❑ Removing cover cap ⇒ page 130

12 - Airbag unit

- ❑ Removing and installing ⇒ General body repairs, interior; Rep. Gr. 69 ; Airbag

13 - Cover cap for left horn plate

- ❑ Removing cover cap ⇒ page 130

14 - Trim - upper part

15 - Securing bolts for trim upper and lower parts

Protected by copyright. Copying for private or commercial purposes, in part or in whole is not permitted unless authorised by Volkswagen AG. Volkswagen AG does not guarantee or accept any liability with respect to the correctness of information in this document. Copyright by Volkswagen AG.

satelettronica

10.2 Assembly overview of steering column, vehicles 10.99 ▸

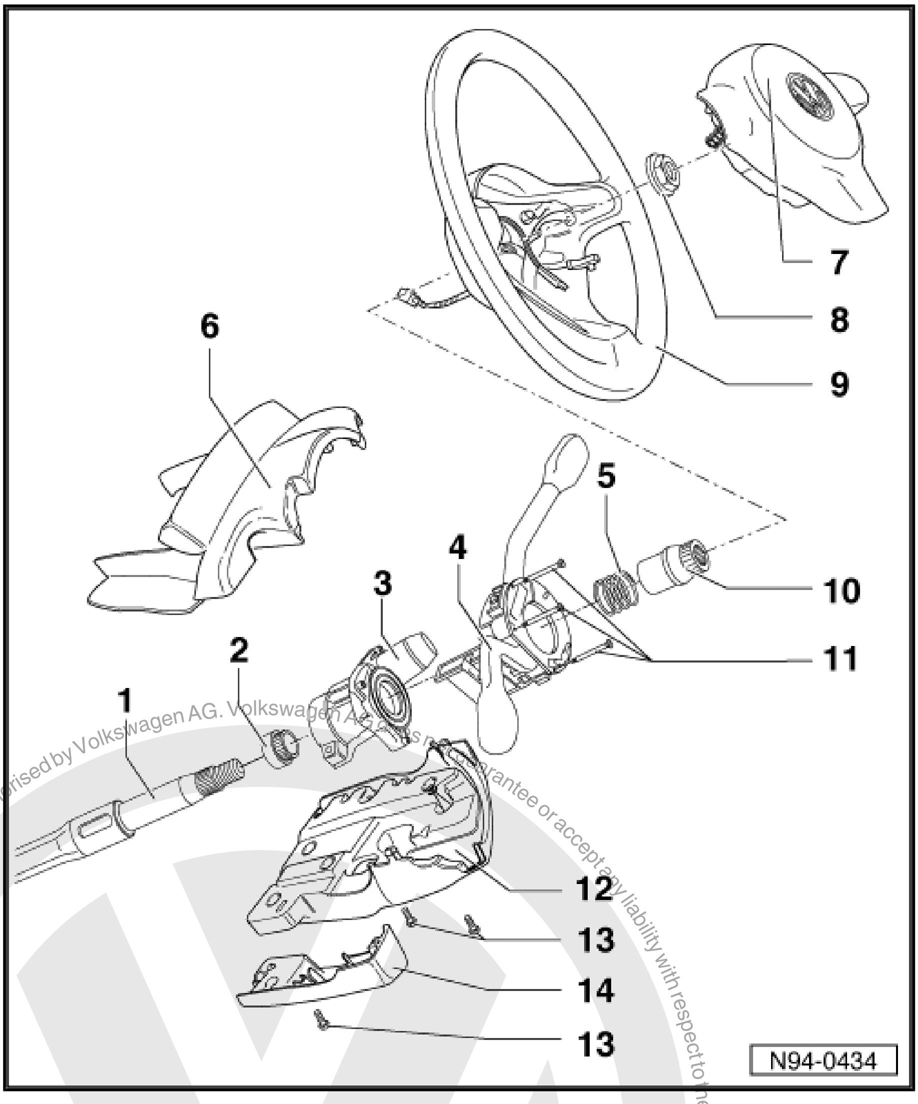

Note

- *To disconnect and reconnect the battery, the procedure described in the workshop manual should be strictly adhered to* *⇒ page 4* *.*
- *If the vehicle has a radio with anti-theft coding, obtain code before disconnecting battery.*
- *Further information for assembling the steering column ⇒ Running gear, axles, steering; Rep. Gr. 48*
- *Instructions for working on vehicles fitted with an airbag ⇒ General body repairs, interior; Rep. Gr. 69 ; Airbag*

Protected by copyright. Copying for private or commercial purposes, in part or in whole, is not permitted unless authorised by Volkswagen AG. Volkswagen AG does not guarantee or accept any liability with respect to the correctness of information in this document. Copyright by Volkswagen AG.
satelettronica

1 - Steering column

2 - Support ring

3 - Steering lock housing

- ❑ Removing and installing ⇒ page 136
- ❑ Removing and installing lock cylinder ⇒ page 138

4 - Steering column switch

- ❑ For turn signals, main and dipped beam, headlight flasher, parking lights, windscreen wiper wash/wipe control and rear window wiper
- ❑ Removing ⇒ page 132 , removing and installing steering column switch

5 - Spring

6 - Trim - upper part

7 - Airbag unit

- ❑ Removing and installing ⇒ General body repairs, interior; Rep. Gr. 69 ; Airbag

8 - Hexagon nut

- ❑ 50 Nm

9 - Steering wheel

- ❑ Grease slip ring for horn plate ⇒ page 131

10 - Multi-point adapter sleeve

11 - Steering column switch securing bolts

12 - Trim - middle lower part

13 - Securing bolts for trim upper and lower parts

14 - Trim - left lower part

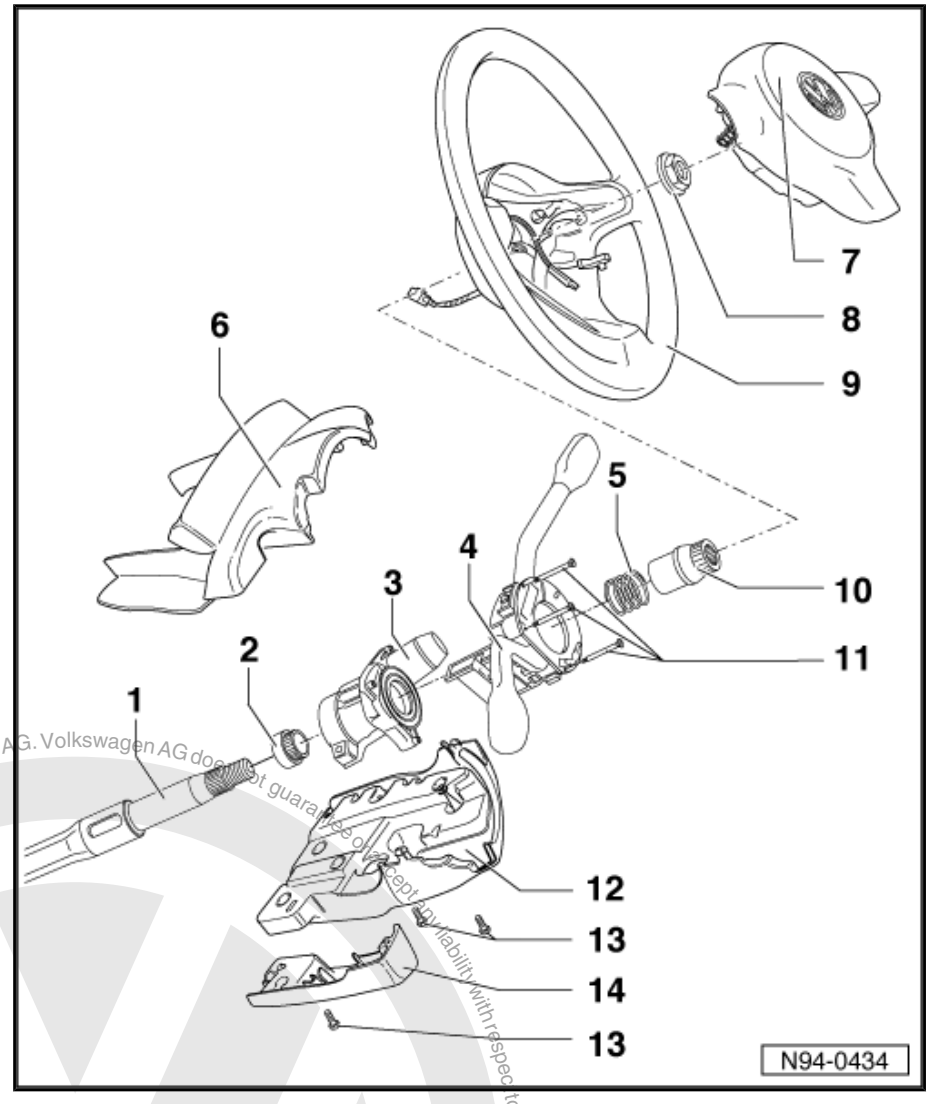

Removing cover caps for horn plate with airbag unit

1 - Cover cap for horn plate

2 - Contact discs

3 - Wiring connector

4 - Springs

Airbag unit must be removed to gain access to the wiring connector ⇒ General body repairs, interior; Rep. Gr. 69 ; Airbag .

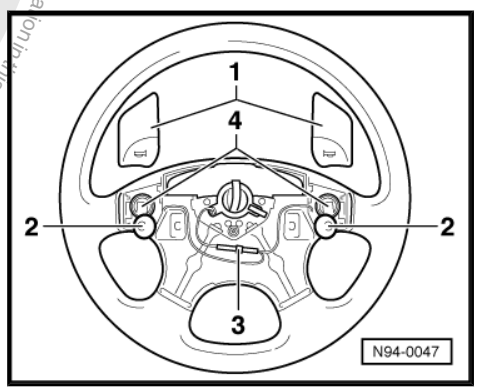

satelettronica

Removing cover cap for horn plate with no airbag unit, vehicles ▸ 09.99

– Lift up lower side of cover cap with button -arrow- and pull off of steering wheel.

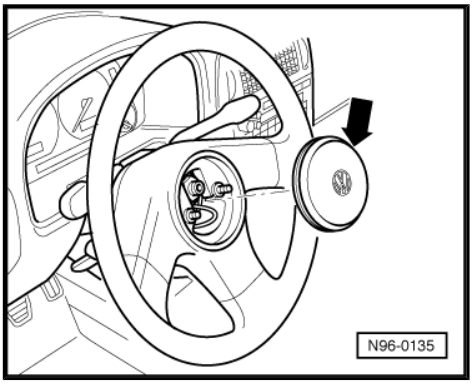

Slip ring for horn plate

– Lubricate slip ring -arrow- with G 000 400 grease.

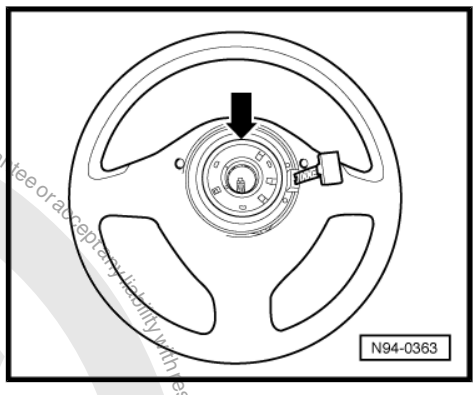

10.3 Removing and installing steering column switch, vehicles ▸ 09.99

Special tools and workshop equipment required

♦ Torque wrench -V.A.G 1331-

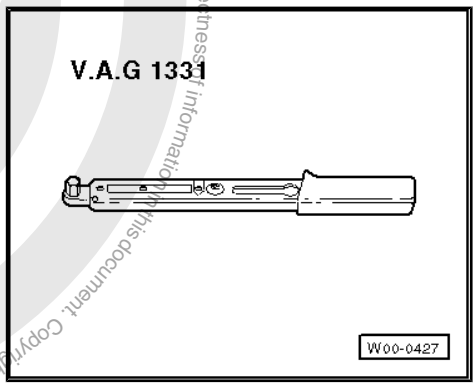

Removing:

Note

♦ *To disconnect and reconnect the battery, the procedure described in the workshop manual should be strictly adhered to* *⇒ page 4* *.*

♦ *If the vehicle has a radio with anti-theft coding, obtain code before disconnecting battery.*

♦ *When the battery is reconnected, check the vehicle equipment (radio, clock, window regulators) as per Workshop Manual and/or the Owner's Manual.*

– Disconnect battery ⇒ page 4 .

Protected by copyright. Copying for private or commercial purposes, in part or in whole, is not permitted unless authorised by Volkswagen AG. Volkswagen AG does not guarantee or accept any liability with respect to the correctness of information in this document. Copyright by Volkswagen AG.
satelettronica

– To remove the lower trim of the steering column switch, remove both cross-head screws -arrows-.
– Removing lower steering column trim
– Remove driver side airbag ⇒ General body repairs, interior; Rep. Gr. 69 ; Airbag .
– Remove steering wheel ⇒ Running gear, axles, steering; Rep. Gr. 48 ; Removing and installing steering wheel ‣ 09.99 .

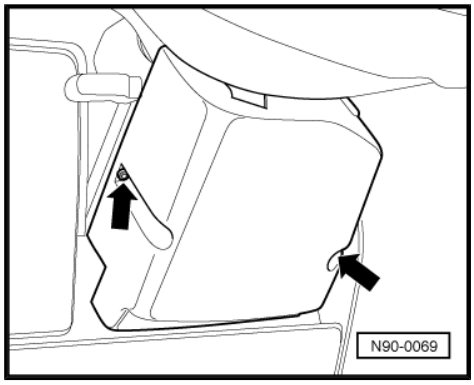

– Detach connector -arrow- from resetting unit.
– Pull connector off steering lock housing.
– Removing upper steering column trim

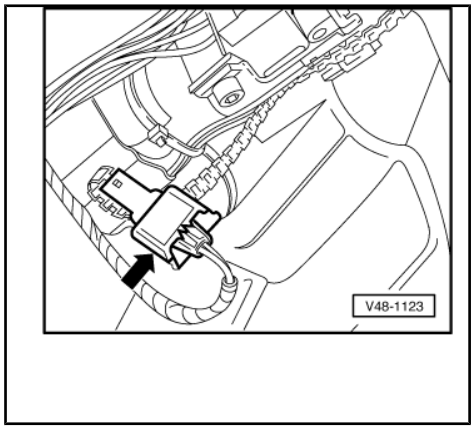

– Remove securing bolts -arrows-.
– Disconnect connectors to turn signal switch and wiper switch.
– Pull off turn signal and windscreen wiper switch from steering column.

Installing:

Installation is carried out in reverse order of removal.

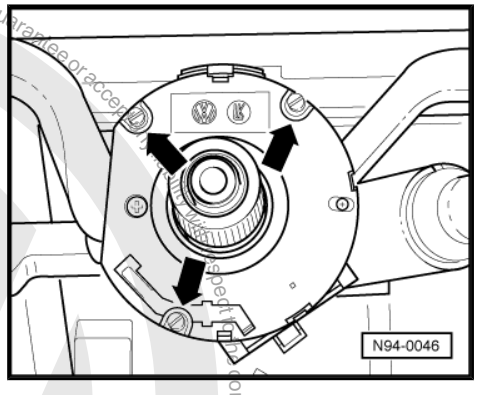

10.4 Removing and installing steering column switch, vehicles 10.99 ‣

Special tools and workshop equipment required

♦ Torque wrench -V.A.G 1331-

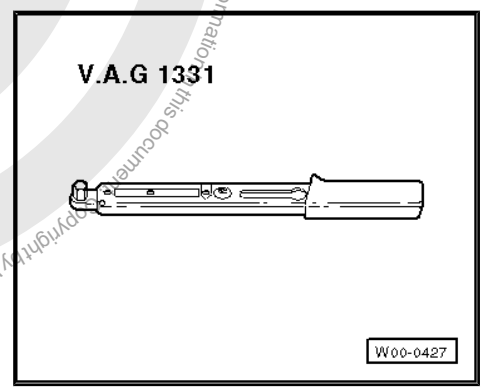

Protected by copyright. Copying for private or commercial purposes, in part or in whole, is not permitted unless authorised by Volkswagen AG. Volkswagen AG does not guarantee or accept any liability with respect to the correctness of information in this document. Copyright by Volkswagen AG.
satelettronica

Removing:

Note

- *To disconnect and reconnect the battery, the procedure described in the workshop manual should be strictly adhered to* *⇒ page 4* *.*
- *If the vehicle has a radio with anti-theft coding, obtain code from customer before disconnecting battery.*
- *When the battery is reconnected, check operation of vehicle electrical equipment (radio, clock and electric windows etc.) according to Workshop Manual or Owner's Manual.*

– Disconnect battery ⇒ page 4 .

– Remove driver airbag ⇒ General body repairs, interior; Rep. Gr. 69 ; Airbag; Removing and installing driver airbag ▸ .

– Remove cross-head screws -1-.

– Remove Torx bolt -2-.

– Remove lower trim -3- and side trim -4- for steering column switch.

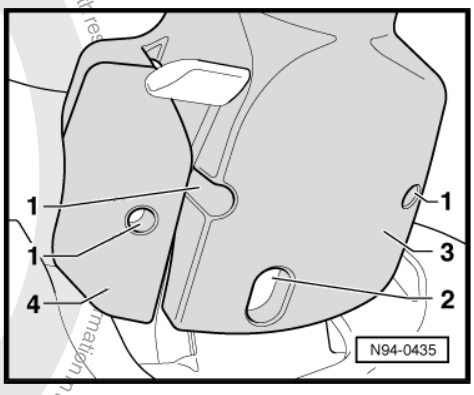

– Detach connector -arrow- from resetting unit.

– Remove steering wheel ⇒ General body repairs, interior; Rep. Gr. 69 ; Airbag; Removing and installing steering wheel 10.99 ▸ .

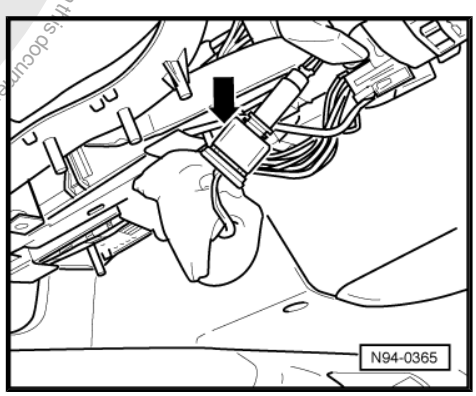

– Detach upper steering column trim -1-.

– Remove securing bolts -arrows-.

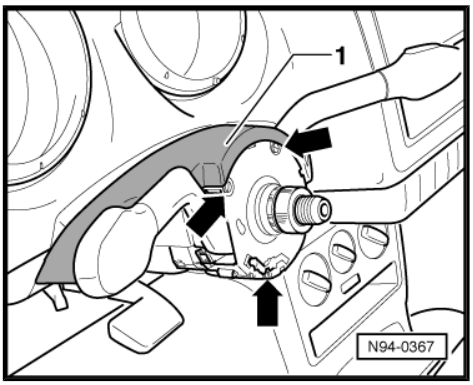

Protected by copyright. Copyright by Volkswagen AG.
Copyright by Volkswagen AG does not guarantee or accept any liability with respect to the correctness of information in this document. Copyright by Volkswagen AG. Protected by copyright. Copyright by Volkswagen AG. Reproduction, distribution, publication or commercial purposes, in print or in other forms, not permitted unless authorised by Volkswagen AG.
satelettronica

– Disconnect connectors -arrows- from steering column switch.

– Remove connector housing -1- downwards out of guide on steering lock housing.

– Remove steering column switch.

Installing:

Installation is carried out in reverse order of removal.

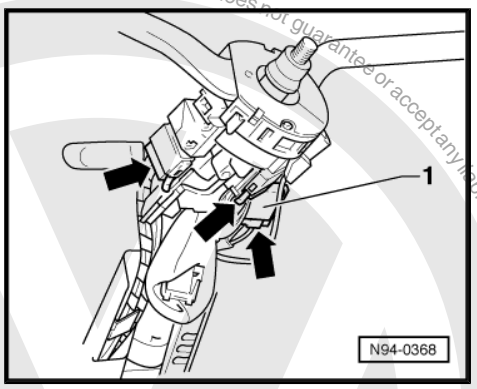

10.5 Removing and installing steering lock housing, vehicles ▸ 09.99

Special tools and workshop equipment required

♦ Puller (e.g. Kukko 204/2, commercially available)

Removing:

– Disconnect battery ⇒ page 4 .

– Remove steering column switch ⇒ page 131 .

Note

♦ *To disconnect and reconnect the battery, the procedure described in the workshop manual should be strictly adhered to* *⇒ page 4* *.*

♦ *If the vehicle has a radio with anti-theft coding, obtain code before disconnecting battery.*

♦ *When the battery is reconnected, check the vehicle equipment (radio, clock, window regulators) as per Workshop Manual and/or the Owner's Manual.*

Vehicles with removable immobilizer reader coil:

– Detach reader coil -arrow- from steering lock housing.

Vehicles with an immobilizer reader coil which is permanently secured to the lock cylinder:

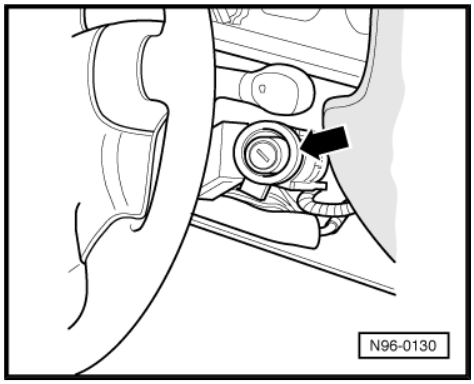

Protected by copyright. Copying for private or commercial purposes, in part or in whole, is not permitted unless authorised by Volkswagen AG. Volkswagen AG does not guarantee or accept any liability with respect to the correctness of information in this document. Copyright by Volkswagen AG.
satelettronica

– Press storage compartment lugs together in direction of arrow.
– Fold storage compartment down and pull out to rear.

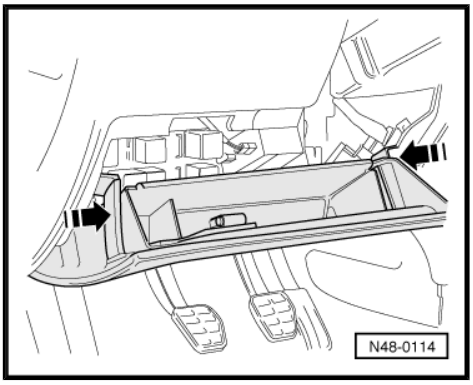

– Carefully pull immobilizer reader coil connector -arrow- off immobilizer control unit.
– Remove reader coil cable from cable guide -1-.

Continuation for all vehicles:

– Pull multi-pin connector off ignition/starter switch.

Vehicles with automatic gearbox

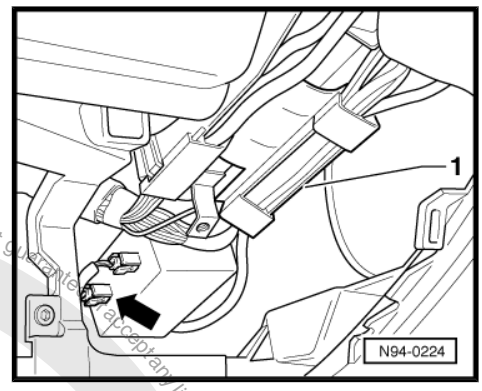

– Pull clip off and unclip locking cable for ignition key removal lock.

Continuation for all vehicles:

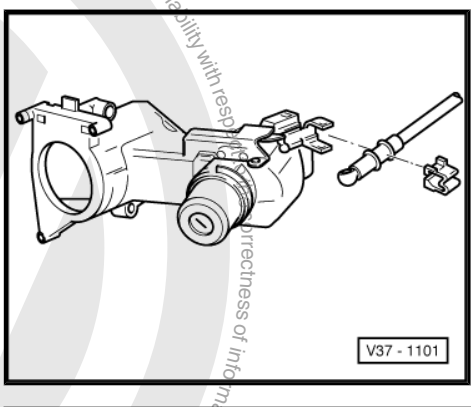

– Drill out shear-head bolt -1- or chisel off if necessary.

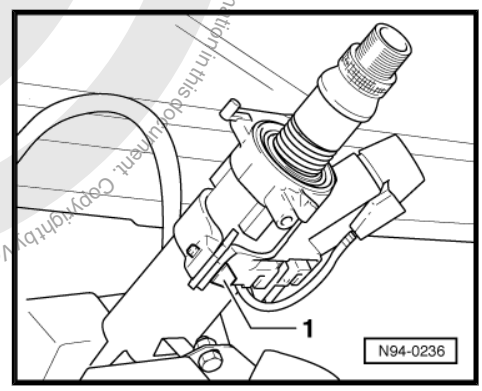

WARNING

Wear safety goggles.

Protected by copyright. Copying for private or commercial purposes, in part or in whole, is not permitted unless authorised by Volkswagen AG. Volkswagen AG does not guarantee or accept any liability with respect to the correctness of information in this document. Copyright by Volkswagen AG.
satelettronica

– Pull off multi-point adapter sleeve with commercially available puller -1- (e.g. Kukko 204/2).

– Pull steering lock housing and spring off column tube and steering column.

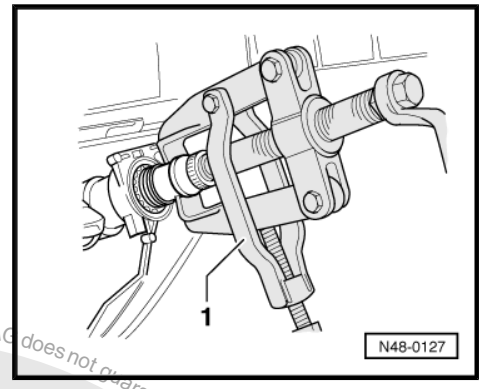

Installing:

– Push steering lock housing and spring onto steering column (note fitted position) and loosely screw in shear-head bolt.

– Remove ignition key and engage steering lock.

– Place multi-point adapter on steering column and screw hexagon nut onto steering column.

– Tighten hexagon nut on steering column.

– Remove nut again.

– Connect multi-pin connector to ignition/starter switch.

– Reconnect immobilizer reader coil connector or reconnect connector to immobilizer control unit.

– Tighten shear-head bolt for steering lock housing until head shears off.

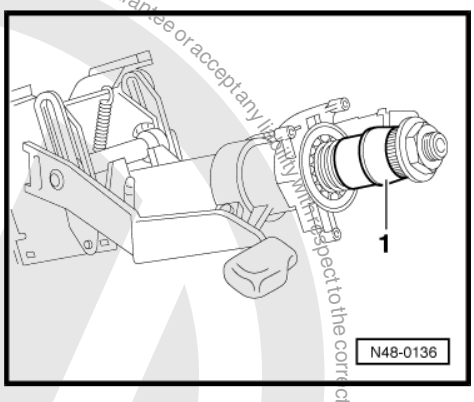

Vehicles with automatic gearbox

– Fit locking cable clip onto locking cable.

– Press locking cable onto ball head.

– Press locking cable with clip into ignition switch cable support bracket.

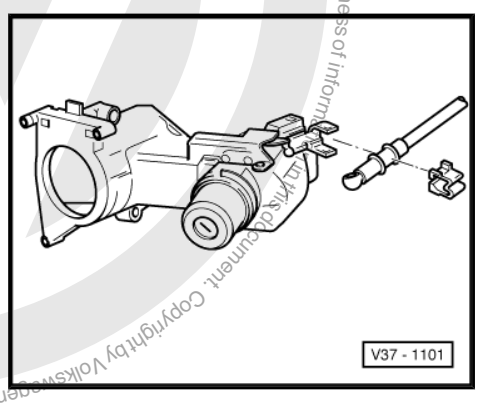

Continuation for all vehicles:

– Install steering column switch ⇒ page 131 .

– Install driver side storage compartment.

Protected by copyright. Copyright by Volkswagen AG. Volkswagen AG does not guarantee or accept any liability with respect to the correctness of information in this document. Copyright by Volkswagen AG. This document is not permitted unless authorised by Volkswagen AG. Volkswagen AG does not guarantee or accept any liability with respect to the correctness of information in this document. Copyright by Volkswagen AG.

10.6 Removing and installing steering lock housing, vehicles 10.99 ▸

Special tools and workshop equipment required

♦ Puller (e.g. Kukko 204/2, commercially available)

Removing:

Note

♦ *To disconnect and reconnect the battery, the procedure described in the workshop manual should be strictly adhered to* *⇒ page 4* *.*

♦ *If the vehicle has a radio with anti-theft coding, obtain code from customer before disconnecting battery.*

♦ *When the battery is reconnected, check operation of vehicle electrical equipment (radio, clock and electric windows etc.) according to Workshop Manual or Owner's Manual.*

– Disconnect battery ⇒ page 4 .

satelettronica

– Remove steering column switch ⇒ page 132 .
– Remove bolt -1- and take off cover -2-.
– Remove bolts -arrows- from driver side storage compartment -3-.
– Take out driver side storage compartment -3-.
– Pull multi-pin connector off ignition/starter switch.

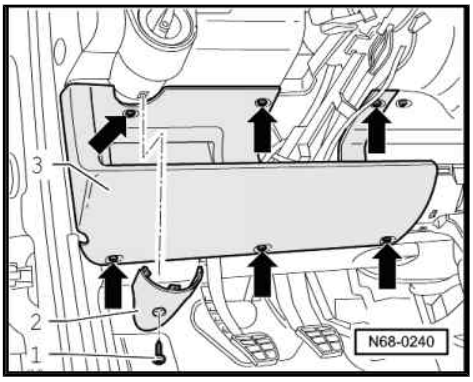

– Unscrew Torx bolts -1- and remove cable duct cover -2-.
– Carefully pull immobilizer reader coil connector off immobilizer control unit.

Vehicles with automatic gearbox

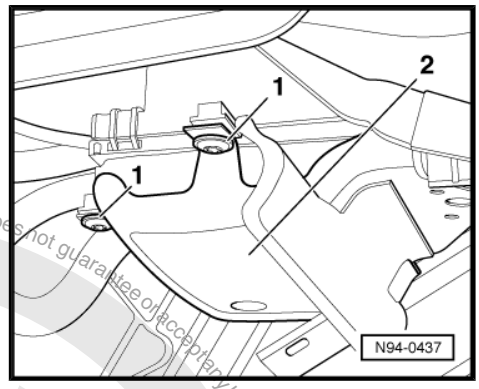

– Pull clip off and unclip locking cable for ignition key removal lock.

Continuation for all vehicles:

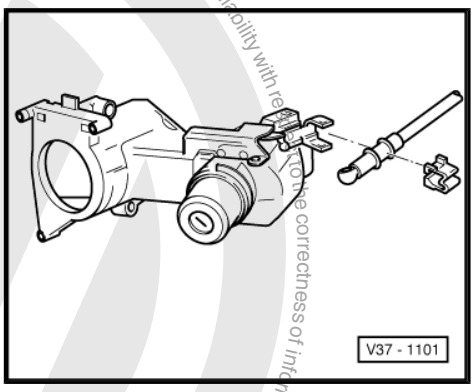

– Drill out shear-head bolt -1- or chisel off if necessary.

> ⚠ **WARNING**
>
> ***Wear safety goggles.***

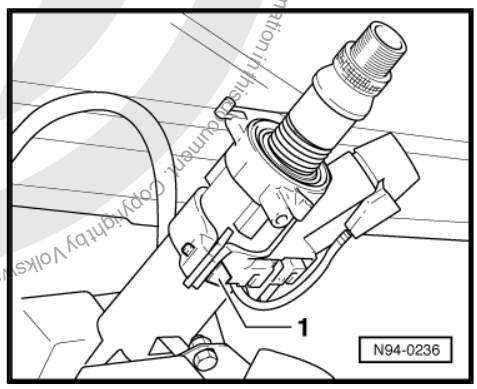

Protected by copyright. Copying for private or commercial purposes, in part or in whole is not permitted unless authorised by Volkswagen AG. Volkswagen AG does not guarantee or accept any liability with respect to the correctness of information in this document. Copyright by Volkswagen AG.
satelettronica

– Pull off multi-point adapter sleeve with commercially available puller -1- (e.g. Kukko 204/2).

– Pull steering lock housing and spring off column tube and steering column.

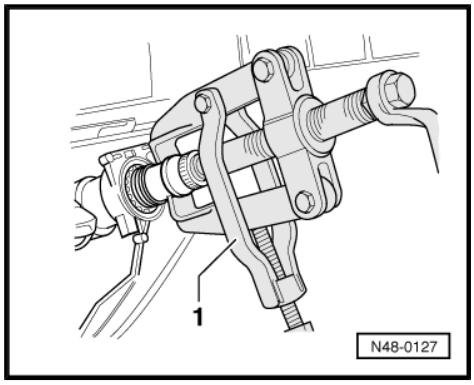

Installing:

– Push steering lock housing and spring onto steering column (note fitted position) and loosely screw in shear-head bolt.

– Remove ignition key and engage steering lock.

– Place multi-point adapter on steering column and screw hexagon nut onto steering column.

– Tighten hexagon nut on steering column.

– Remove nut again.

– Connect multi-pin connector to ignition/starter switch.

– Tighten shear-head bolt for steering lock housing until head shears off.

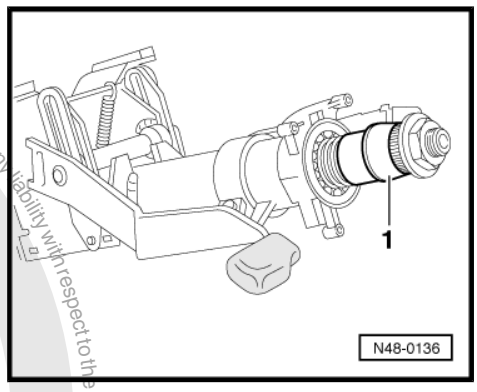

Vehicles with automatic gearbox:

– Fit locking cable clip onto locking cable.

– Press locking cable onto ball head.

– Press locking cable with clip into ignition switch cable support bracket.

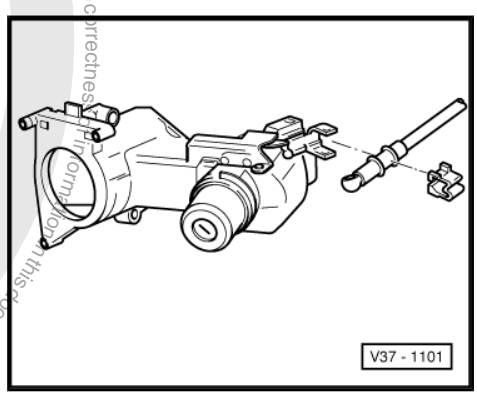

Continuation for all vehicles:

– Install steering column switch ⇒ page 132 .

– Install driver side storage compartment.

10.7 Lock cylinder, vehicles ▸ 09.99

Note

Steering lock housing which has been drilled must not be installed again.

10.7.1 Removing and installing lock cylinder

Note

Steering lock housing which has been drilled must not be installed again.

Removing:

– Remove steering lock housing ⇒ page 134

Vehicles with removable immobilizer reader coil:

Protected by copyright. Copyright by Volkswagen AG. Volkswagen AG does not guarantee or accept any liability with respect to the correctness of information in this document. Copyright by Volkswagen AG. Copying for private or commercial purposes, in part or in whole, is not permitted unless authorised by Volkswagen AG.
satelettronica

– Mark drilling hole on steering lock housing.

a - 12 mm

b - 10 mm

Vehicles with an immobilizer reader coil which is permanently secured to the lock cylinder:

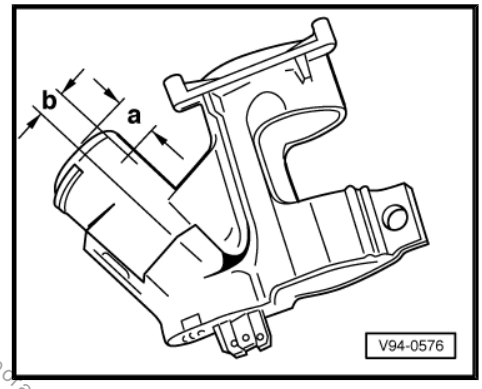

– Mark drilling hole on steering lock housing.

a - 9.5 mm

b - 10 mm

Continuation for all vehicles:

– Drill into steering lock housing (approx. 3 mm), until the lock cylinder spring is evident.
– Using opposite end of drill compress lock spring and pull out lock cylinder.

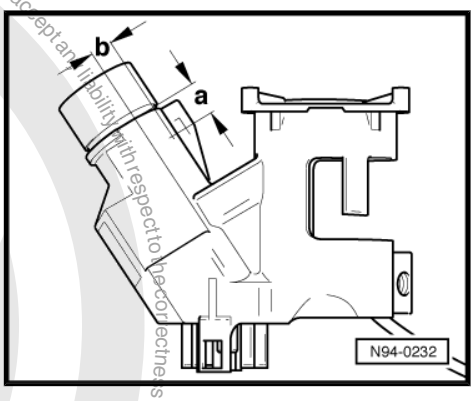

Installing:

Note

Steering lock housing which has been drilled must not be installed again.

– Push lock cylinder into new steering lock housing.
– By slightly turning key in lock cylinder it can be pushed in onto stop.
– Install steering lock housing ⇒ page 134

10.8 Lock cylinder, vehicles 10.99 ▸

Note

Steering lock housing which has been drilled must not be installed again.

10.8.1 Removing and installing lock cylinder

Note

Steering lock housing which has been drilled must not be installed again.

Removing:

– Remove steering lock housing ⇒ page 136

Protected by copyright. Copyright by Volkswagen AG. Copyright for private or commercial purposes, in part or whole is not permitted unless authorised by Volkswagen AG. Volkswagen AG does not guarantee or accept any liability with respect to the correctness of information in this document.
satelettronica

– Remove clip -1- on steering lock housing.

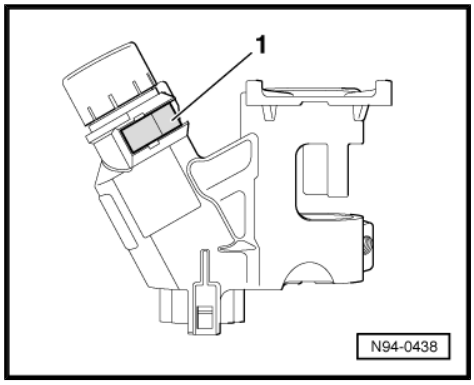

– Mark drilling hole on steering lock housing.

a - 9.5 mm

b - 10 mm

– Drill into steering lock housing (approx. 3 mm), until the lock cylinder spring is evident.

– Using opposite end of drill compress lock spring and pull out lock cylinder.

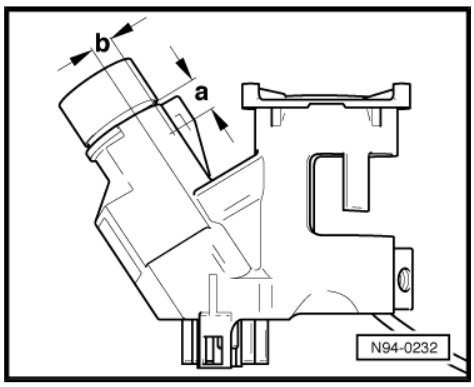

Installing:

Note

Steering lock housing which has been drilled must not be installed again.

– Push lock cylinder into new steering lock housing.

– By slightly turning key in lock cylinder it can be pushed in onto stop.

– Install steering lock housing ⇒ page 136

10.9 Removing and installing ignition/starter switch

Note

- *To disconnect and reconnect the battery, the procedure described in the workshop manual should be strictly adhered to* *⇒ page 4* *.*
- *If the vehicle has a radio with anti-theft coding, obtain code before disconnecting battery.*
- *When the battery is reconnected, check the vehicle equipment (radio, clock, window regulators) as per Workshop Manual and/or the Owner's Manual.*

10.9.1 Removing ignition/starter switch

– Disconnect battery ⇒ page 4 .

– Remove steering lock housing, vehicles ‣ 09.99 ⇒ page 138 .

– Remove steering lock housing, vehicles 10.99 ‣ ⇒ page 139 .

Protected by copyright. Copyright by Volkswagen AG.
Copyright by Volkswagen AG does not guarantee or accept any liability with respect to the correctness of information in this document.
Copyright by Volkswagen AG. Commercial purposes, in part or in whole, are not permitted unless authorised by Volkswagen AG.
satelettronica

– Remove securing bolt -arrow- and pull ignition/starter switch out of steering lock housing.

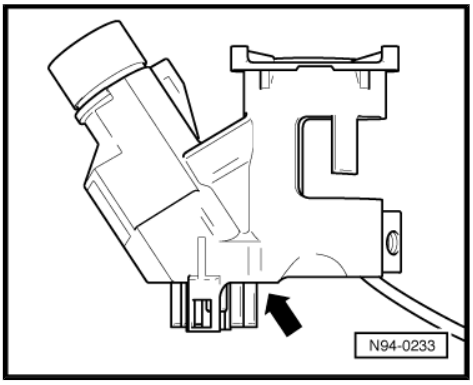

10.9.2 Installing ignition/starter switch

– Push ignition switch into steering lock housing.

Note

When installing the ignition/starter switch ensure that the ignition/ starter switch and the lock cylinder are in the same position, e.g. "ignition on".

– Tighten securing bolt.

– Install steering lock housing, vehicles ‣ 09.99 ⇒ page 134 .

– Install steering lock housing, vehicles 10.99 ‣ ⇒ page 136 .

10.10 Pin assignment for ignition switch

Connector, 8-pin

1 - Terminal 50

2 - Terminal 15

3 - Terminal X

4 - Terminal S

5 - Terminal 30

6 - Terminal P

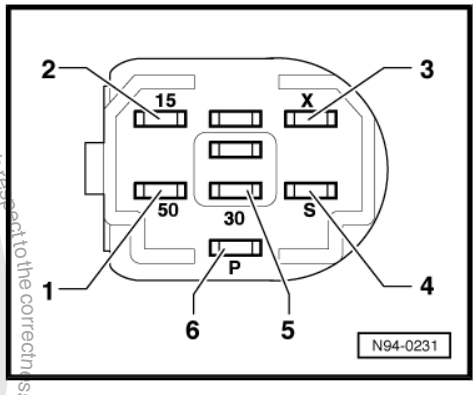

Protected by copyright. Copyright for private or commercial purposes, in part or in whole, is not permitted unless authorised by Volkswagen AG. Volkswagen AG does not guarantee or accept any liability with respect to the correctness of information in this document. Copyright by Volkswagen AG.
satelettronica

96 – Lights, bulbs, switches - interior

1 Immobilizer

1.1 Assembly overview of immobilizer, vehicles ▸ 09.99

1 - Immobilizer control unit - J362-

Removing and installing
⇒ page 142

2 - Immobilizer reading coil - D2- .

Removing and installing
⇒ page 143

3 - Transponder (response-reader memory) integrated in ignition key

4 - Fuel cut-off valve control unit on diesel injection pump

If defective the complete diesel injection pump with the fuel cut-off valve control unit is to be replaced.

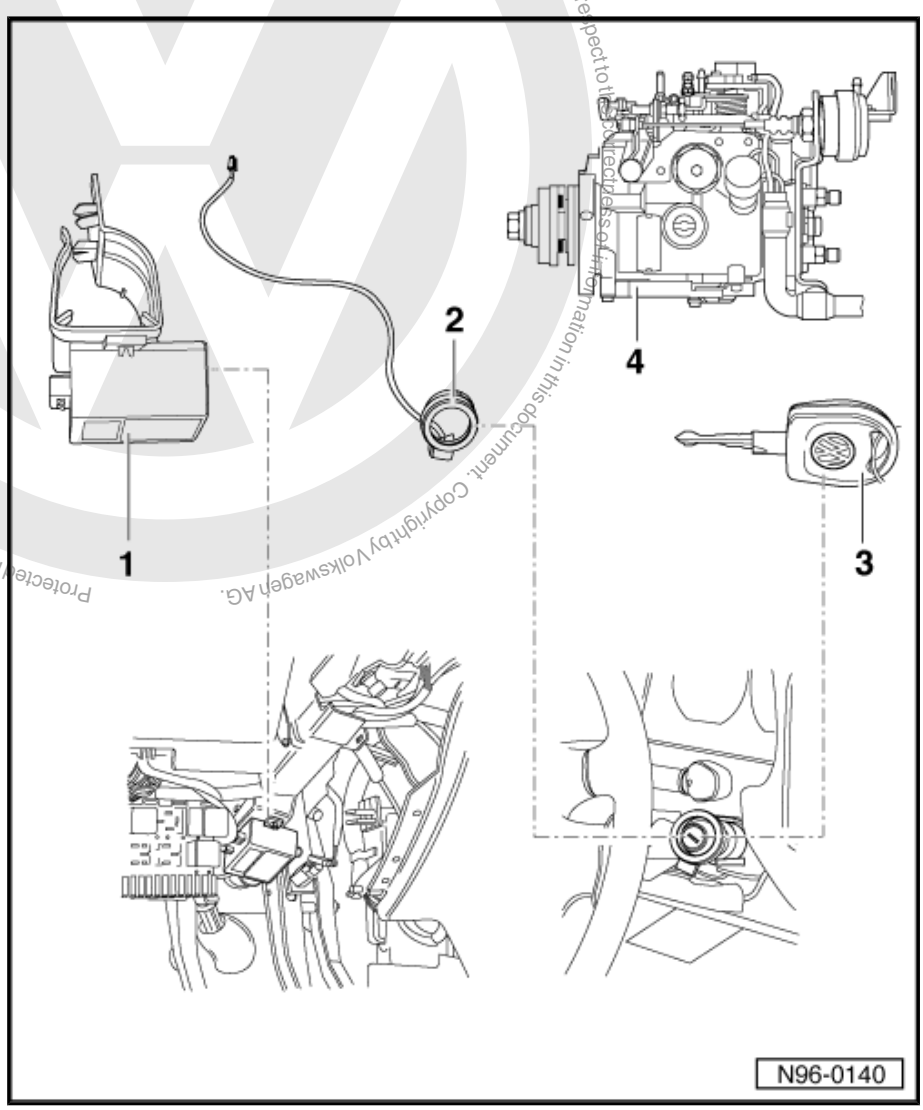

1.2 Removing and installing immobilizer control unit, vehicles ▸ 09.99

The immobilizer control unit -J362- is located on the steering column under the dash panel.

satelettronica

1.3 Removing and installing immobilizer reader coil -D2- , vehicles ▸ 09.99

Note

The immobilizer reader coil is secured to the lock cylinder housing and cannot be renewed individually on later vehicles.

– Remove upper and lower trim parts of steering column switch.
– Pull connector off immobilizer control unit.
– Pull reader coil off steering lock housing.

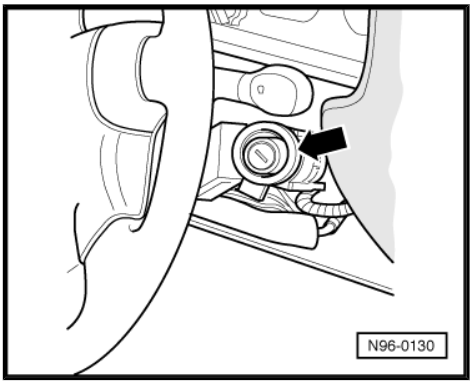

1.4 Assembly overview of immobilizer, vehicles 10.99 ▸

Protected by copyright. Copying for private or commercial purposes, in part or in whole, is not permitted unless authorised by Volkswagen AG. Volkswagen AG does not guarantee or accept any liability with respect to the correctness of information in this document. Copyright by Volkswagen AG.

satelettronica

1 - Immobilizer control unit - J362-

Removing and installing
⇒ page 144

2 - Transponder (response-reader memory) integrated in ignition key

3 - Fuel cut-off valve control unit on diesel injection pump

If defective the complete diesel injection pump with the fuel cut-off valve control unit is to be replaced.

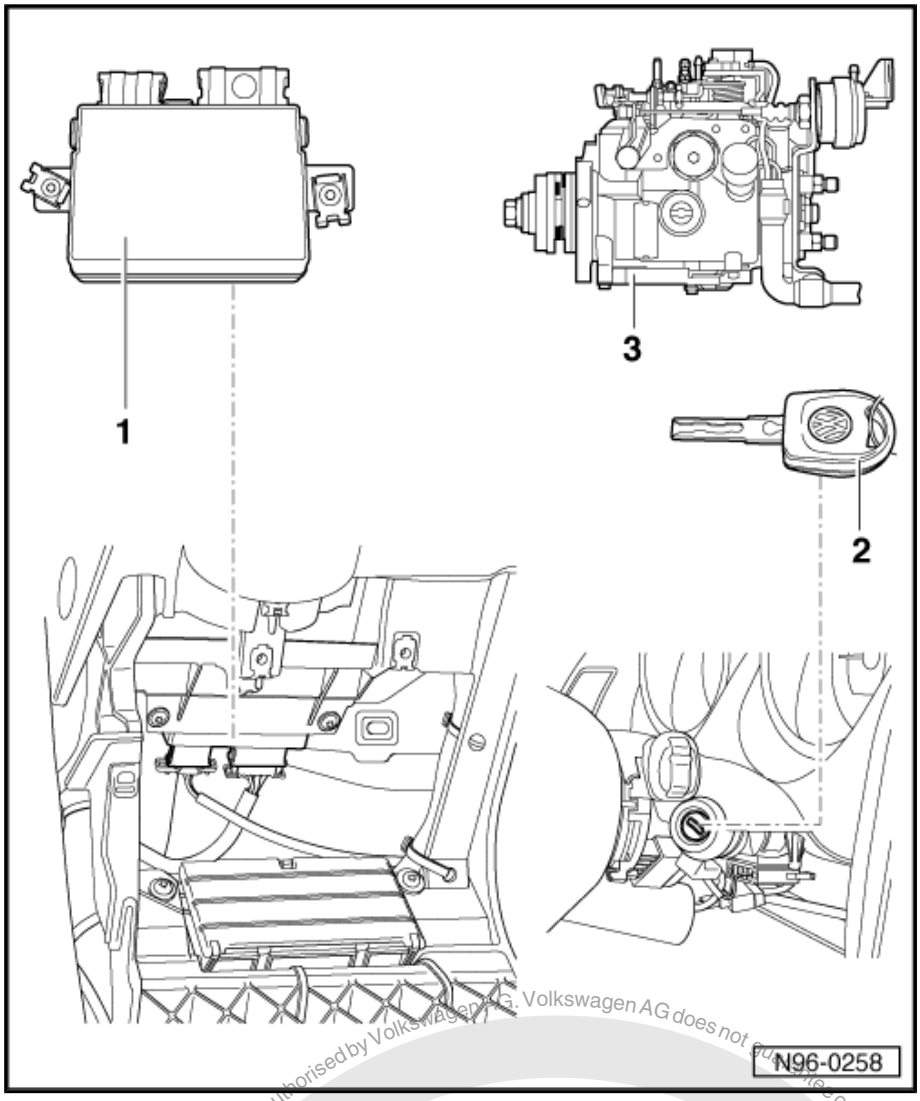

1.5 Removing and installing immobilizer control unit, vehicles 10.99 ▸

Removing:

– Remove bolt -1- and take off cover -2-.

– Remove bolts -arrows- from driver side storage compartment -3-.

– Take out driver side storage compartment -3-.

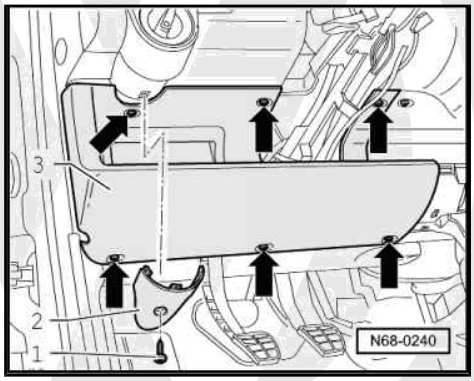

Protected by copyright. Copying for private or commercial purposes, in part or in whole, is not permitted unless authorised by Volkswagen AG. Volkswagen AG does not guarantee or accept any liability with respect to the correctness of information in this document. Copyright by Volkswagen AG.
satelettronica

– Remove Torx bolts -arrows- which secure the immobilizer control unit.

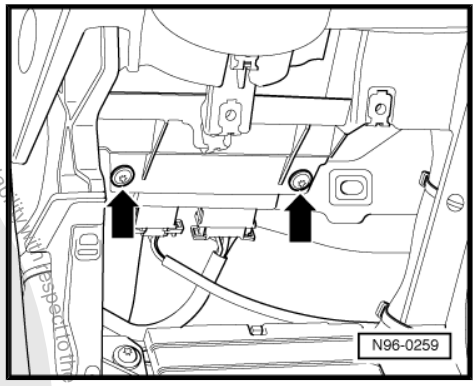

– Disconnect connectors -arrows- from immobilizer control unit.
– The immobilizer control unit can now be pulled out forwards.

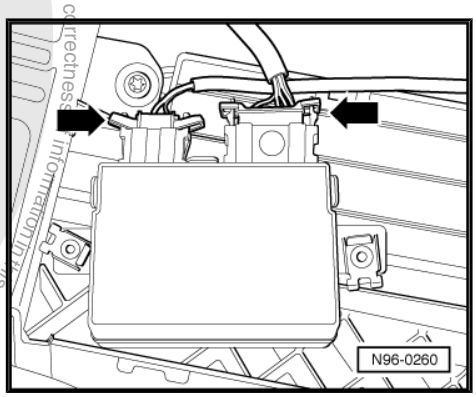

Installing:

Installation is carried out in reverse order of removal.

1.6 Removing and installing immobilizer reader coil -D2- , vehicles 10.99 ▸

The immobilizer reader coil is secured to the steering lock housing and cannot be renewed as an individual item.

1.7 Transponder

Renewal of transponder (response-reader memory) in ignition key is not possible.

The complete key must always be renewed if the transponder is found to be defective ⇒ Electrical system, self-diagnosis; Rep. Gr. 01 .

Volkswagen AG. Volkswagen AG does not guarantee or accept any liability with respect to the correctness of information in this document. Copyright by Volkswagen AG. Copyright. Copying for private or commercial purposes, in part or in whole, is not permitted unless authorised by Volkswagen AG.
satelettronica

2 Interior lights and switches

2.1 Removing and installing switches in dash panel, vehicles ▸ 09.99

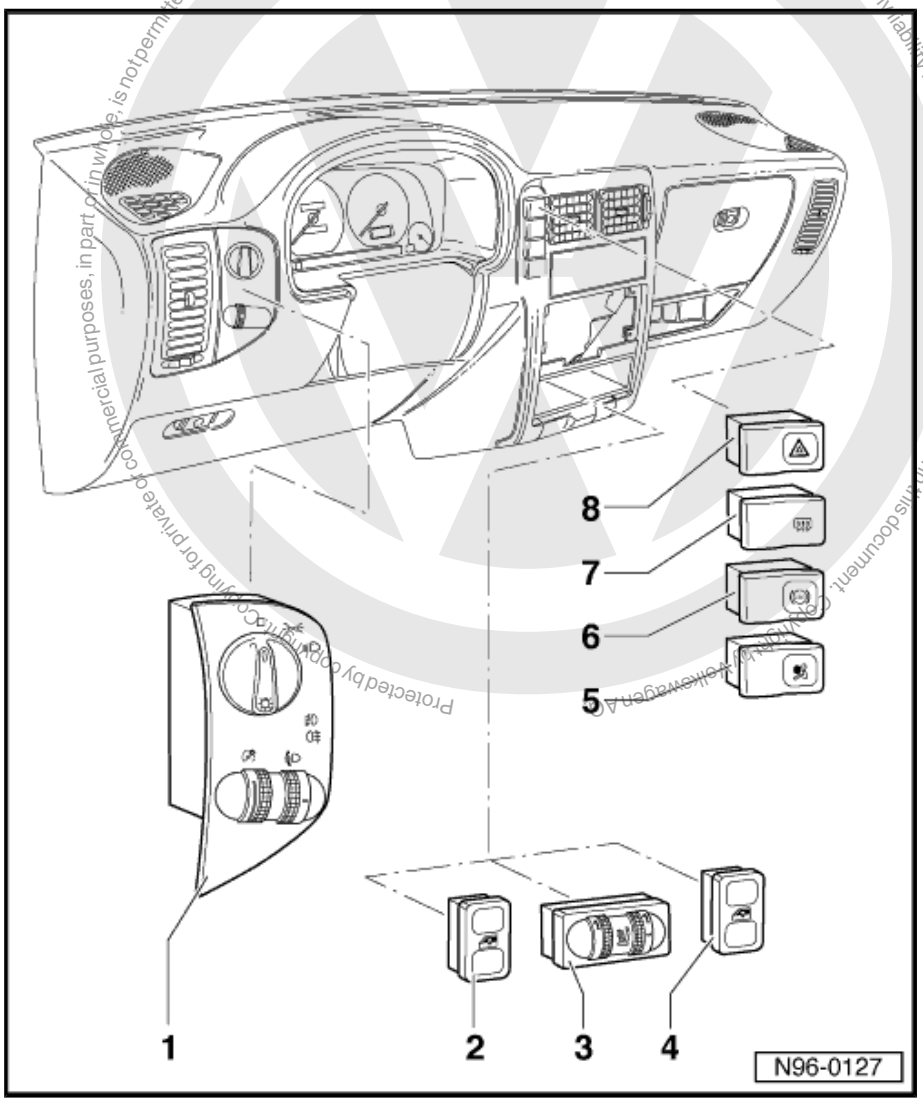

1 - Light switch -E1-

Multi-pin connector for side lights and dipped beam, fog lights and rear fog lights on vehicles with electric headlight range control.

- ❑ Removing and installing ⇒ page 147

2 - Front left window regulator switch -E40-

- ❑ Removing and installing ⇒ page 149

3 - Heated driver seat regulator -E94- and heated front passenger seat regulator -E95-

- ❑ Removing and installing ⇒ page 149

4 - Front right window regulator switch -E41-

- ❑ Removing and installing ⇒ page 149

5 - Airbag warning lamp -K75-

- ❑ Removing and installing ⇒ page 149

6 - Anti-lock brake system (ABS) warning lamp -K47-

- ❑ Removing and installing ⇒ page 149

7 - Heated rear window switch -E15-

- ❑ Removing and installing ⇒ page 149

8 - Hazard warning light switch -E3-

- ❑ Removing and installing ⇒ page 149

Protected by copyright. Copying for private or commercial purposes, in part or in whole, is not permitted unless authorised by Volkswagen AG. Volkswagen AG does not guarantee or accept any liability with respect to the correctness of information in this document. ©Copyright by Volkswagen AG.
satelettronica

2.2 Removing and installing switches in dash panel, vehicles 10.99 ▸

1 - Light switch -E1-

- ❑ Removing and installing ⇒ page 148

2 - Headlight range control regulator -E102- with switches and instruments illumination regulator -E20-

- ❑ Removing and installing ⇒ page 149

3 - Hazard warning light switch -E3-

- ❑ Removing and installing ⇒ page 150

4 - Heated front passenger seat regulator -E95-

- ❑ Removing and installing ⇒ page 150

5 - Heated rear window switch -E15-

- ❑ Removing and installing ⇒ page 150

6 - Heated driver seat switch with regulator -E94-

- ❑ Removing and installing ⇒ page 150

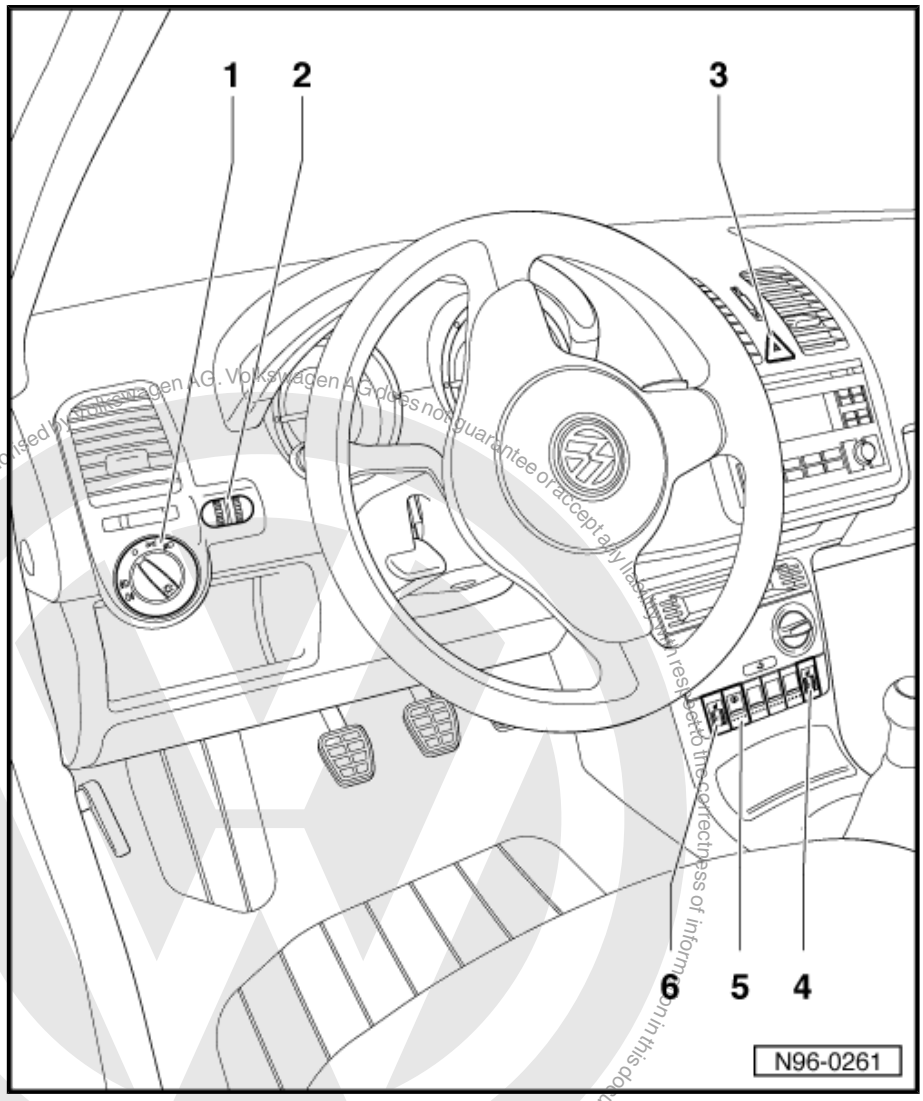

Protected by copyright. Copying for private or commercial purposes, in whole or in part, is not permitted unless authorised by Volkswagen AG. Volkswagen AG does not guarantee or accept any liability with respect to the correctness of information in this document. Copyright by Volkswagen AG.

satelettronica

2.3 Removing and installing light switch, vehicles ▸ 09.99

Removing:

– Install driver side storage compartment ⇒ General body repairs, interior; Rep. Gr. 68 .

– Push lower retainer -arrow- upwards.
– Pull light switch out of dash panel.
– Disconnect connector.

Installing:

– Reconnect connector.
– Insert light switch into dash panel and engage.
– Install driver storage compartment.

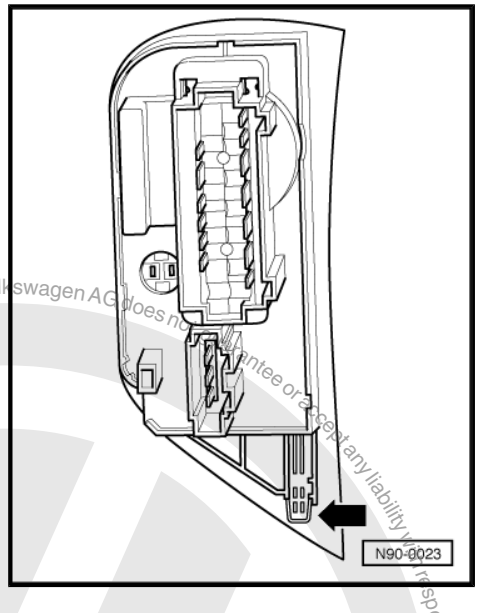

2.4 Removing and installing light switch, vehicles 10.99 ▸

Removing:

Carry out following procedures:

– Turn rotary position indicator of light switch to position '0'.
– Press rotary position indicator of light switch firmly inwards-1- and turn slightly to right -2-
– Hold rotary grip in this position and pull light switch out of dash panel using rotary grip -3-.
– Release and disconnect connectors.

Installing:

– Reconnect connectors.

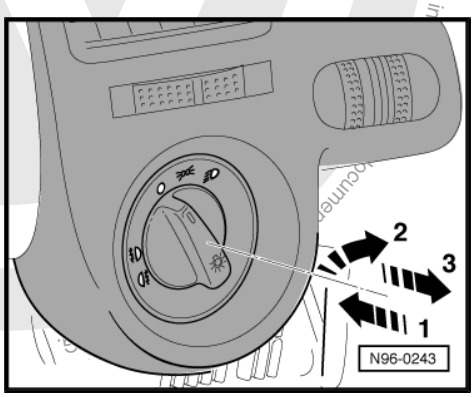

– Hold light switch and press rotary part of light switch firmly inwards -1- and turn slightly to right -2-.
– Hold rotary grip in this position and insert light switch in dash panel -3-.
– Turn grip to position '0', release and engage switch.

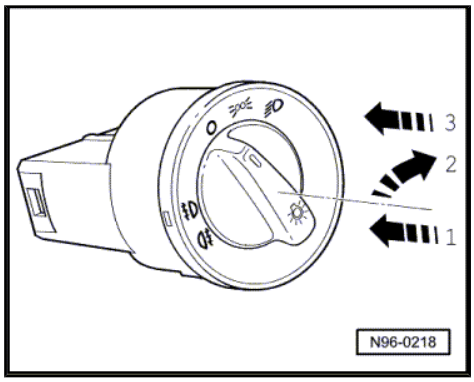

Protected by copyright. Copying for private or commercial purposes, in part or in whole, is not permitted unless authorised by Volkswagen AG. Volkswagen AG does not guarantee or accept any liability with respect to the correctness of information in this document.
satelettronica

2.5 Removing and installing headlight range control regulator -E102- with switches and instruments illumination regulator - E20- , vehicles 10.99 ▸

Removing:

– Remove light switch ⇒ page 148

– Remove bolt -1- and pivot cover with ventilation grille -2- out of dash panel in direction of arrow.

– Disconnect connector.

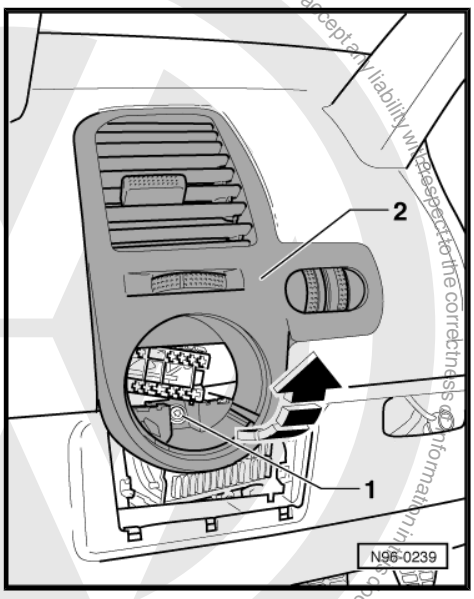

– Press retaining hooks -arrows- together and pull regulator -1- out of cover -2-.

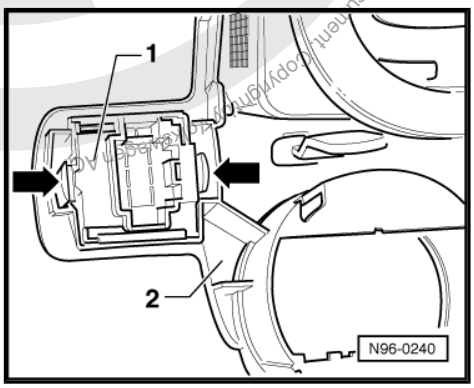

Installing:

Installation is carried out in reverse order of removal.

2.6 Removing and installing switches in centre of dash panel, vehicles ▸ 09.99

The removal and installation procedure is the same for all switches and only the heated rear window switch -E15- is described here.

Removing:

♦ Heated rear window switch -E15-

– Insert plain slot screwdriver between dash panel and switch on right-hand side of switch and carefully release switch.

– Disconnect connector.

Installing:

– Reconnect connectors.

– Push switch into mounting in dash panel and engage.

Protected by copyright. Copying for private or commercial purposes, in part or in whole, is not permitted unless authorised by Volkswagen AG. Volkswagen AG does not guarantee or accept any liability with respect to the correctness of information in this document. Copyright by Volkswagen AG.
satelettronica

Protected by copyright. Copying for private or commercial purposes, in part or in whole, is not permitted unless authorised by Volkswagen AG. Volkswagen AG does not guarantee or accept any liability with respect to the correctness of information in this document. Copyright by Volkswagen AG.

2.7 Removing and installing switches in centre of dash panel, vehicles 10.99 ▸

Removing and installing

- ♦ Heated rear window switch
- ♦ Heated seat regulator
- ♦ Switches for other optional equipment

is the same for all switches and is described for only one switch.

Removing:

– Insert plain slot screwdriver between dash panel and switch and carefully release switch.

– Take out switch to the front.

– Disconnect connector.

Installing:

Installation is carried out in reverse order of removal.

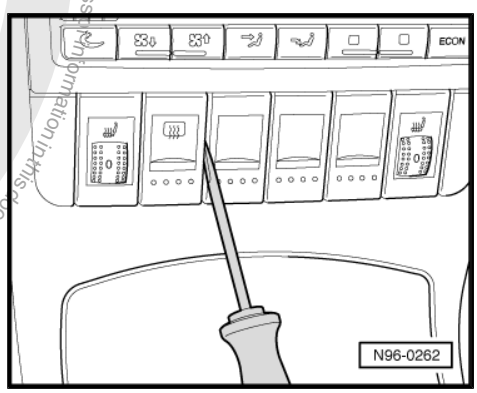

2.8 Removing and installing hazard warning light switch -E3- , vehicles 10.99 ▸

Removing:

– Remove radio or radio navigation system ⇒ Radio, telephone, navigation; Rep. Gr. 91 .

– Remove Torx bolts -arrows- and pull centre vent out slightly.

– Disconnect connector from hazard warning light switch.

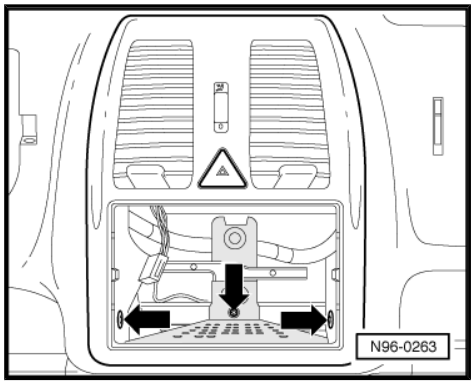

– Push spring clip down on lugs -arrows- and push hazard warning light switch -1- out to rear.

Installing:

Installation is carried out in reverse order of removal.

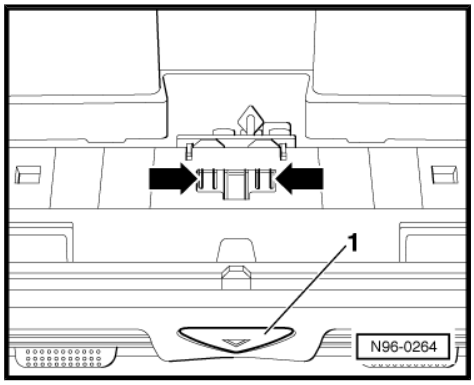

satelettronica

2.9 Removing and installing interior light, vehicles 10.99 ▸

Removing:

– Lever interior light carefully out of roof trim using a plain slot screwdriver.

– Release connector and pull off.

Installing:

Installation is carried out in reverse order of removal.

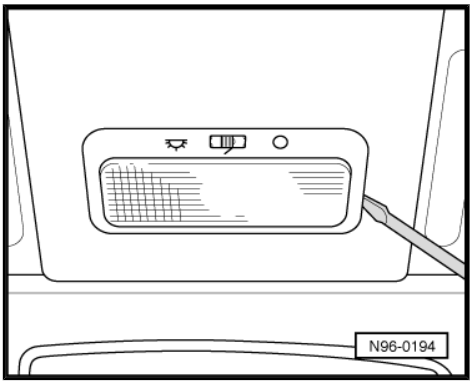

2.9.1 Renewing interior light bulb:

– Remove interior light.

– Release bulb cover by pressing sides and slide off to side -arrow-.

– Renew 12 V/10 W festoon bulb.

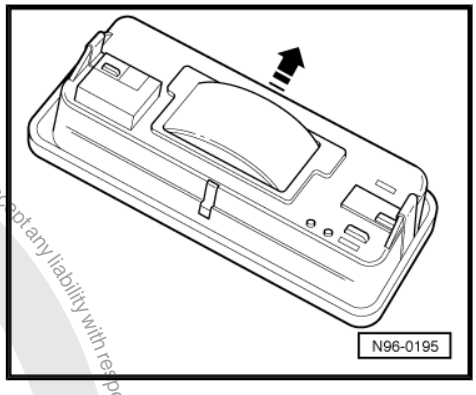

2.10 Removing and installing sliding sunroof adjustment regulator -E139- , vehicles 10.99 ▸

Removing:

– Remove interior light ⇒ page 151

– Remove cover -1- downwards.

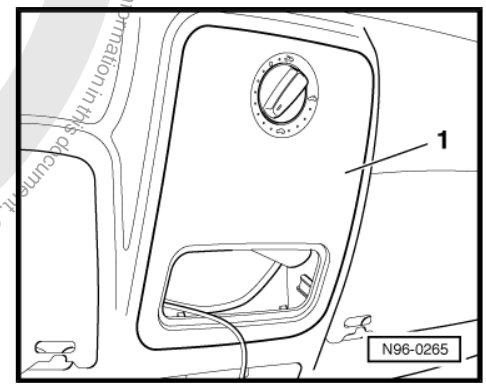

Protected by copyright. Copying for private or commercial purposes, in part or in whole, is not permitted unless authorised by Volkswagen AG. Volkswagen AG does not guarantee or accept any liability with respect to the correctness of information in this document. Copyright by Volkswagen AG.
satelettronica

– Remove Torx bolts -arrows- and remove sliding sunroof adjustment regulator -1- downwards.

– Disconnect connector.

Installing:

Installation is carried out in reverse order of removal.

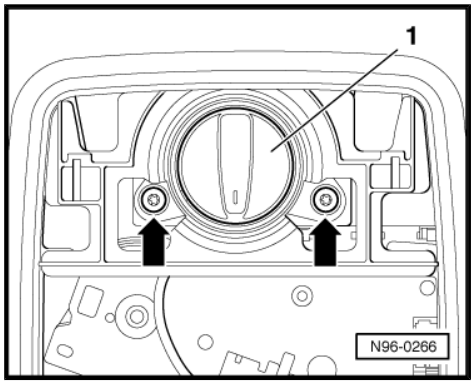

2.11 Removing and installing window regulator switches, vehicles 10.99 ▸

2.11.1 Removing and installing window regulator switches in driver door

Removing:

Carry out following procedures:

– Carefully release spring tension of switch housing with a plain slot screwdriver and pull out switch unit upwards.

– Disconnect connectors.

– Push window regulator switch downwards out of switch housing.

Installing:

Installation is carried out in reverse order of removal.

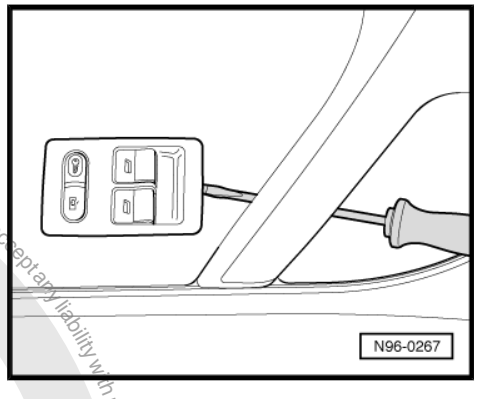

2.11.2 Removing and installing window regulator switches in front passenger's door and rear doors

Removing and installing

- Front right window regulator switch -E41-
- Rear left window regulator switch -E52-
- Rear right window regulator switch -E54-

is performed in the same way for all switches and is described only for the front right window regulator switch -E41- .

Removing:

Carry out following procedures:

Protected by copyright. Copying for private or commercial purposes, in part or in whole, is not permitted unless authorised by Volkswagen AG. Volkswagen AG does not guarantee or accept any liability with respect to the correctness of information in this document. Copyright by Volkswagen AG.
satelettronica

– Carefully release spring tension of switch housing with a plain slot screwdriver and pull out upwards.
– Disconnect connector.
– Push window regulator switch downwards out of housing.

Installing:

Installation is carried out in reverse order of removal.

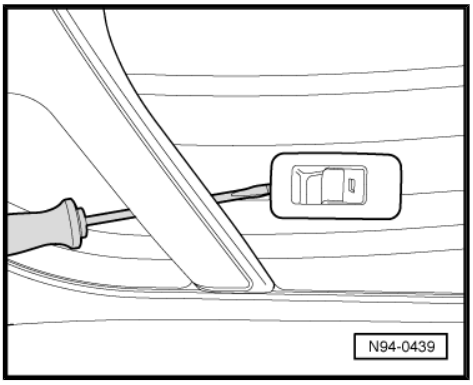

2.12 Removing and installing mirror adjustment switch -E43- with mirror adjustment change-over switch -E48- , vehicles 10.99 ▸

Removing:

Carry out following procedures:

– Take out mirror adjustment switch -arrow- forwards.
– Disconnect connector.

Installing:

Installation is carried out in reverse order of removal.

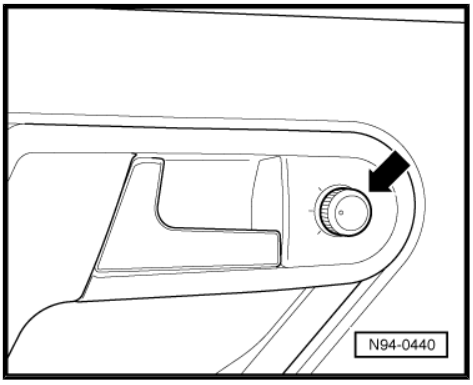

2.13 Removing and installing door contact switch, vehicles 10.99 ▸

Removing and installing

- Driver door contact switch -F2-
- Front passenger door contact switch -F3-
- Rear left door contact switch -F10-
- Rear right door contact switch -F11-

Is performed in the same way for all switches and is described only for the front passenger door contact switch -F3- .

Protected by copyright. Copying for private or commercial purposes, in part or in whole, is not permitted unless authorised by Volkswagen AG. Volkswagen AG does not guarantee or accept any liability with respect to the correctness of information in this document. Copyright by Volkswagen AG.
satelettronica

Removing:

– Pull off rubber seal -arrow-.

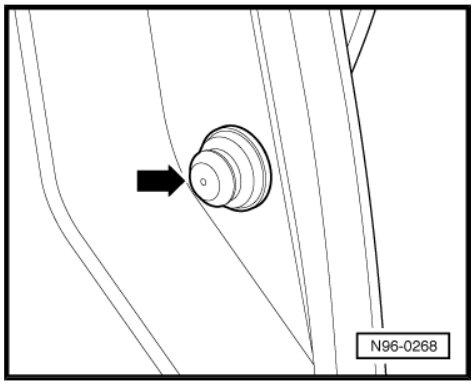

– Carefully release spring tension of door contact switch with a plain slot screwdriver and pull switch out forwards.

– Disconnect connector.

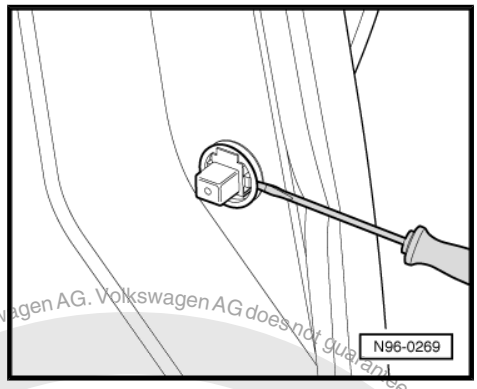

Installing:

Installation is carried out in reverse order of removal.

Protected by copyright. Copying for private or commercial purposes, in part or in whole, is not permitted unless authorised by Volkswagen AG. Volkswagen AG does not guarantee or accept any liability with respect to the correctness of information in this document. Copyright by Volkswagen AG.
satelettronica

97 – Wiring

1 Removing and installing relay carrier, coupling station and fuse holder

Protected by copyright. Copying for private or commercial purposes, in part or whole, is not permitted unless authorised by Volkswagen AG. Volkswagen AG does not guarantee or accept any liability with respect to the correctness of information in this document. Copyright by Volkswagen AG.

Note

- *To disconnect and reconnect the battery, the procedure described in the workshop manual should be strictly adhered to* *⇒ page 4* *.*
- *If the vehicle has a radio with anti-theft coding, obtain code before disconnecting battery.*
- *When the battery is reconnected, check the vehicle equipment (radio, clock, window regulators) as per Workshop Manual and/or the Owner's Manual.*

1.1 Removing and installing relay plate, vehicles ▸ 1997

Removing:

– Disconnect battery ⇒ page 4 .

– Remove driver side storage compartment ⇒ General body repairs, interior; Rep. Gr. 68 .

– Release securing clips -1- from pins -3- on left and right of relay plate and swing upwards.

– Press left retaining arm -2- outwards, until the locking device on the relay plate is pulled out of the hole -4- of the retaining arm. Then unhook relay plate.

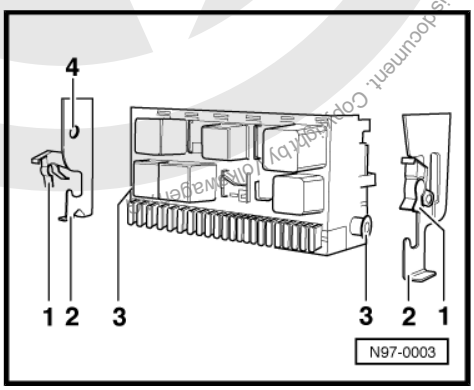

Installing:

Installation is carried out in the reverse order. When installing observe the following:

When installing, ensure the relay plate locking device engages in the hole -4- of the retaining arm. The securing clips -1- engage on the pins -3-.

1.2 Removing and installing multi-pin connector on back of relay plate, vehicle ▸ 1997

Note

Multi-pin connector pin assignment ⇒ Current flow diagrams, Electrical fault finding and Fitting locations

Remove multi-pin connector:

– Disconnect battery ⇒ page 4 .

satelettronica

– Pull locking slide -1- on back of relay plate out of housing onto stop (approx. 5 mm) -arrow-.

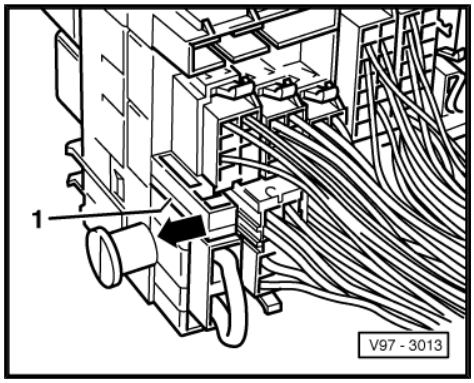

– Press fasteners on multi-pin connector -arrow- and pull multi-pin connector out of relay plate.

Install multi-pin connector:

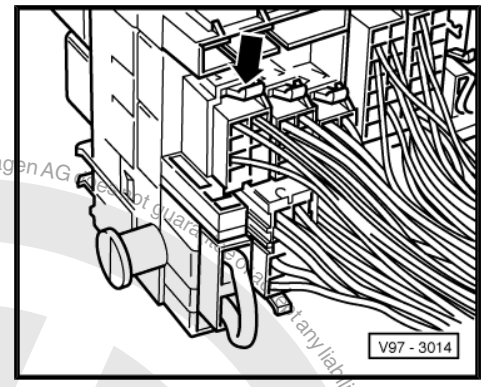

Note

Insert multi-pin connector so that the locking pins -2- face towards the locking slide -1-.

– Insert multi-pin connector into respective slot onto stop so that locking pin -2- is inserted into cut-out -4- and press inwards until locking lug -3- engages.

– Press locking slide -1- onto stop -arrow-. This is only possible when all multi-pin connectors are installed so that each locking lug -3- is inserted and engaged.

– Connecting battery ⇒ page 4 .

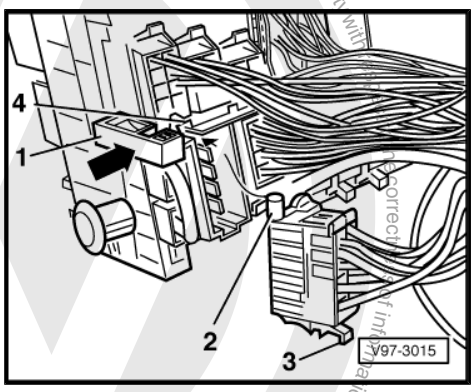

1.3 Removing and installing fuse holder and relay carrier, vehicles 1998 ▸ 09.99

Vehicles 1998 ▸ are equipped with 2 fuse holders. One of the fuse holders is located in the front left footwell, the other is located on the battery.

1.4 Removing and installing relay carrier in front left footwell, vehicles 1998 ▸ 09.99

Removing:

– Disconnect battery ⇒ page 4 .

– Remove dash panel trim on driver side footwell ⇒ General body repairs, interior; Rep. Gr. 70 .

– Release all fasteners of multi-pin connectors and disconnect connectors.

– Pull out relays and control units.

– Release all threaded terminals of lines located on the underside.

– Remove securing bolts.

satelettronica

– Remove coupling station with relay carrier downwards.

Installing:

Installation is carried out in reverse order of removal.

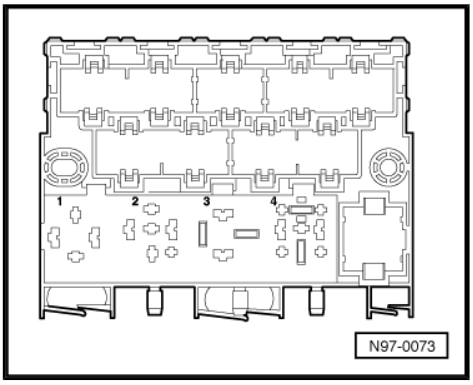

1.5 Removing and installing fuse holder in front left footwell, vehicles 1998 ▸ 09.99

Removing:

– Disconnect battery ⇒ page 4 .

– Remove dash panel trim on driver side footwell ⇒ General body repairs, interior; Rep. Gr. 70 .

– Remove both securing bolts -A-.

Installing:

Installation is carried out in reverse order of removal.

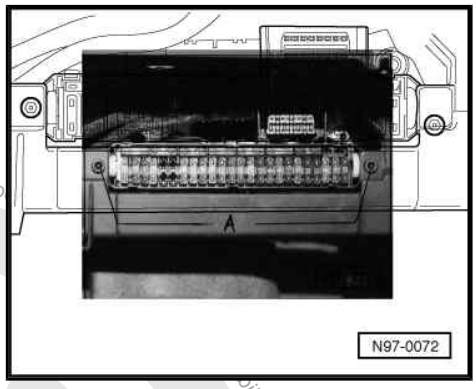

1.6 Removing and installing relay carrier, vehicles 10.99 ▸

Removing:

– Disconnect battery ⇒ page 4 .

– Remove bolt -1- and take off cover -2-.

– Remove bolts -arrows- from driver side storage compartment -3-.

– Take out driver side storage compartment -3-.

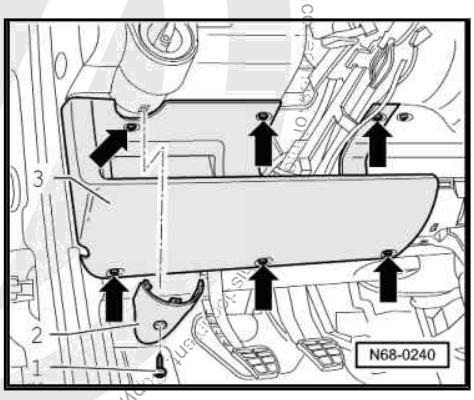

Protected by copyright. Copying for private or commercial purposes, in part or in whole is not permitted unless authorised by Volkswagen AG. Volkswagen AG does not guarantee or accept any liability with respect to the correctness of information in this document. Copyright by Volkswagen AG.
satelettronica

– Remove bolts -arrows- for securing fuse holder.

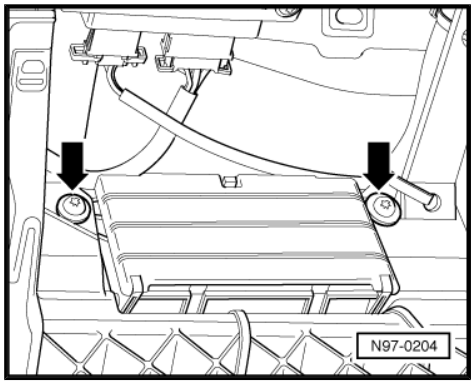

– Detach coupling station -arrow- below relay carrier and pull down slightly.
– Disconnect all multi-pin connectors.

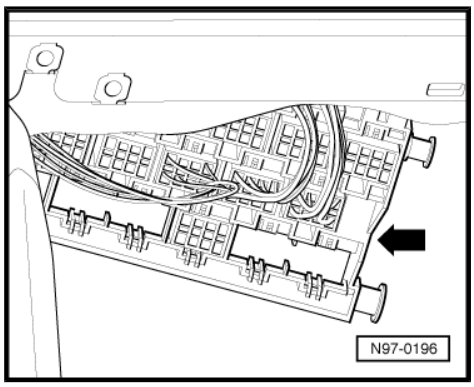

– To unclip multi-pin connector: release retaining lugs -arrows- and push connector -1- out to rear out of coupling station.
– Take coupling station out downwards.
– Detach cable tie from wiring harness of fuse holder.

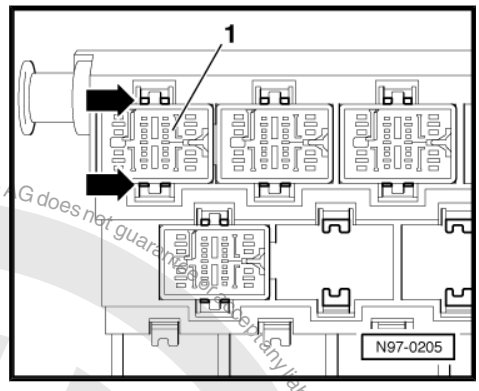

– Pull fuse holder -arrow- downwards slightly.
– Pull relays and control units off relay carrier.

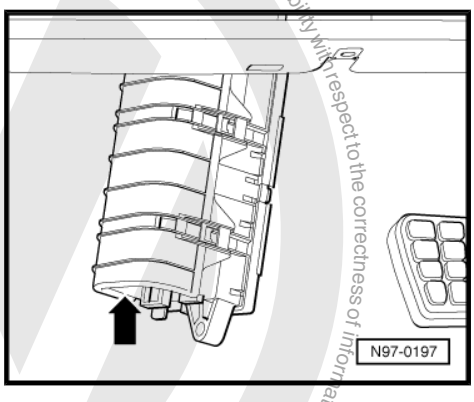

Protected by copyright. Copying for private or commercial purposes, in part or in whole is not permitted unless authorised by Volkswagen AG. Volkswagen AG does not guarantee or assume any liability with respect to the correctness of information in this document. Copyright by Volkswagen AG.
satelettronica

– Press retaining lugs -arrows- outwards and press relay socket to rear out of relay carrier.

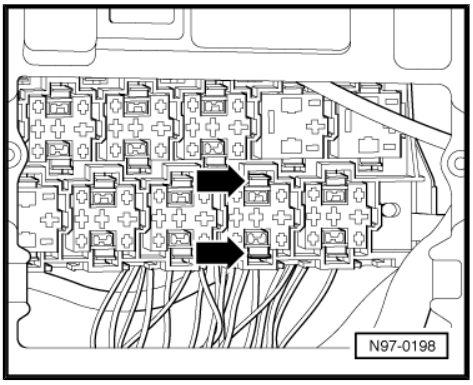

– Unclip relay carrier on left and right -arrows-.
– Take relay carrier out downwards.

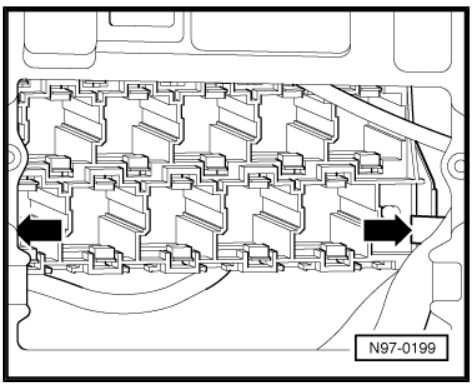

Installing:

– Insert relay carrier and clip-in on left and right -arrows-.
– Insert relay socket into relay carrier from behind and engage.

Note

Relay carrier assignment ⇒ Current flow diagrams, Electrical fault finding and Fitting locations

– Install relays and control units.
– Insert fuse holder and tighten bolts -arrows-.
– Install multi-pin connector and insert coupling station.

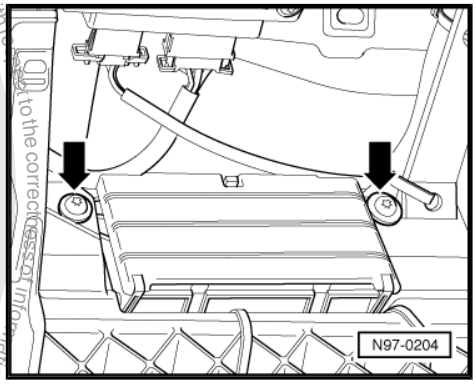

Note

Multi-pin connector pin assignment ⇒ Current flow diagrams, Electrical fault finding and Fitting locations

– Install driver side storage compartment -3-.
– Tighten securing bolts -arrows- for driver side storage compartment -3-.
– Install cover -2- and tighten bolt -1-.
– Connecting battery ⇒ page 4 .

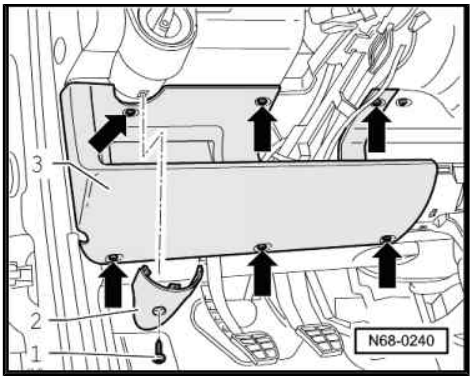

Protected by copyright. Copyright by Volkswagen AG. Volkswagen AG does not guarantee or accept any liability with respect to the correctness of information in this document. Copyright by Volkswagen AG. Not authorised by Volkswagen AG. Not permitted for commercial purposes, in part or in whole, is not permitted.
satelettronica

1.7 Removing and installing coupling station below relay carrier, vehicles 10.99 ▸

Removing:

– Disconnect battery ⇒ page 4 .

– Remove bolt -1- and take off cover -2-.

– Remove bolts -arrows- from driver side storage compartment -3-.

– Take out driver side storage compartment -3-.

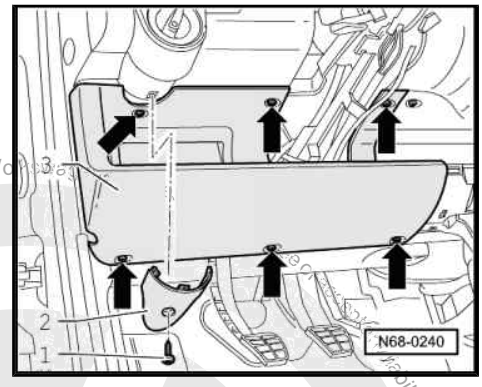

– Detach coupling station -arrow- below relay carrier and pull down slightly.

– Disconnect all multi-pin connectors.

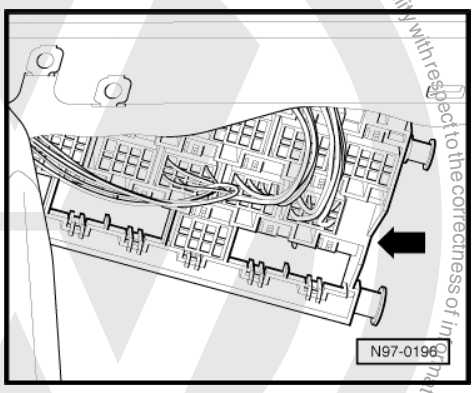

– To unclip multi-pin connector: release retaining lugs -arrows- and push connector -1- out to rear out of coupling station.

– Take coupling station out downwards.

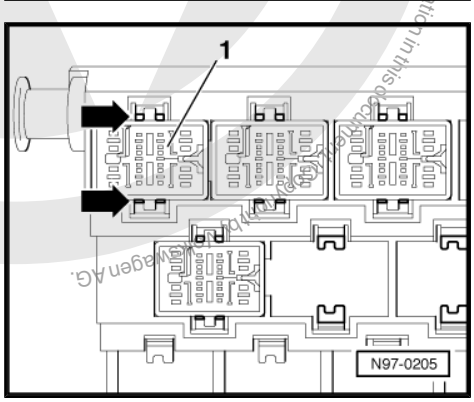

Installing:

– Install multi-pin connector and insert coupling station.

Note

Multi-pin connector pin assignment ⇒ Current flow diagrams, Electrical fault finding and Fitting locations

– Install driver side storage compartment -3-.

– Tighten securing bolts -arrows- for driver side storage compartment -3-.

– Install cover -2- and tighten bolt -1-.

– Connecting battery ⇒ page 4 .

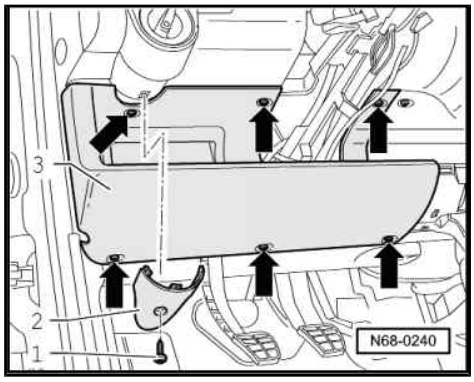

Protected by copyright. Copying for private or commercial purposes, in part or in whole, is not permitted unless authorised by Volkswagen AG. Volkswagen AG does not guarantee or accept any liability with respect to the correctness of information in this document.
satelettronica

1.8 Removing and installing fuse holder in front left footwell, vehicles 10.99 ➤

Removing:

– Disconnect battery ⇒ page 4 .

– Remove bolt -1- and take off cover -2-.

– Remove bolts -arrows- from driver side storage compartment -3-.

– Take out driver side storage compartment -3-.

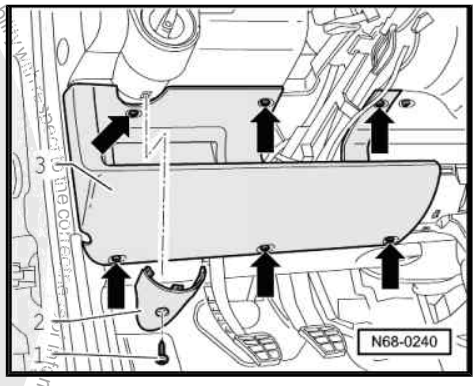

– Remove bolts -arrows- for securing fuse holder.

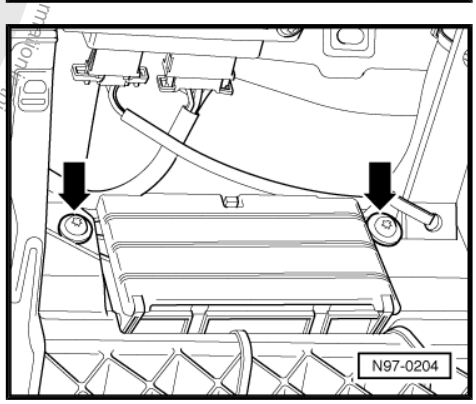

– Detach coupling station -arrow- below relay carrier and pull down slightly.

– Disconnect all multi-pin connectors.

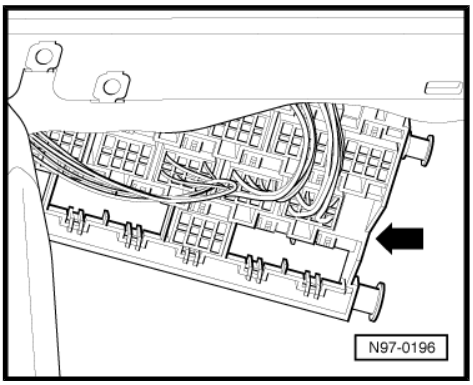

– To unclip multi-pin connector: release retaining lugs -arrows- and push connector -1- out to rear out of coupling station.

– Take coupling station out downwards.

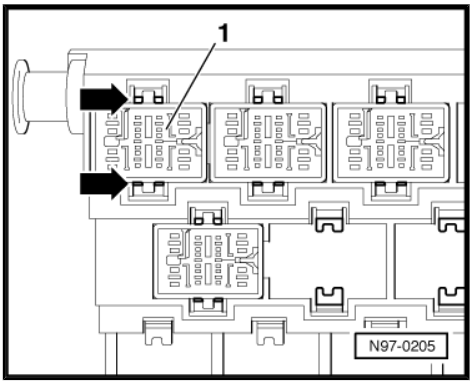

Protected by copyright. Copying for private or commercial purposes, in part or in whole, is not permitted unless authorised by Volkswagen AG. Volkswagen AG does not guarantee or accept any liability with respect to the correctness and completeness of this documentation. Copyright by Volkswagen AG.
satelettronica

– Pull fuse holder -arrow- downwards slightly.

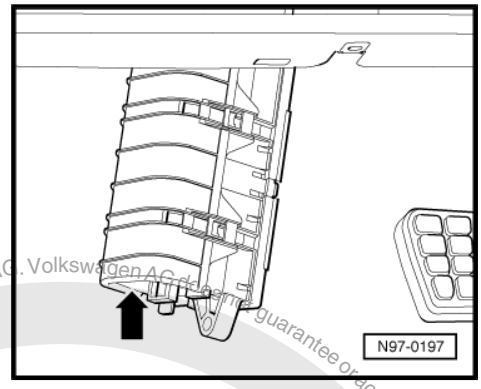

– Press locking lugs -arrows- together and remove cover -1-.
– Take fuses out of fuse holder.

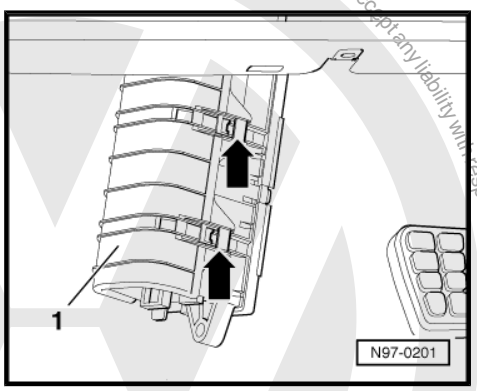

– Pull locking slide -arrows- on the back of the fuse holder out of housing onto stop.
– Pull wiring out of fuse holder.

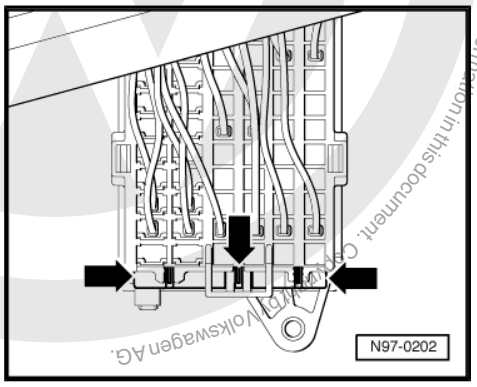

Installing:

Installation is carried out in the reverse order. When installing observe the following:

Note

Fuse holder assignment ⇒ Current flow diagrams, Electrical fault finding and Fitting locations

Protected by copyright. Copying for private or commercial purposes, in part or in whole, is not permitted unless authorised by Volkswagen AG. Volkswagen AG does not guarantee or accept any liability with respect to the correctness of information in this document. Copyright by Volkswagen AG.
satelettronica

2 Wiring harness and connector repairs

All the instructions and information for this chapter can be found in the workshop manual “Electrical System, General Information”. A link to this workshop manual is not possible at present for technical reasons. Please select the workshop manual “Electrical System, General Information” manually in ELSA.

Protected by copyright. Copying for private or commercial purposes, in part or in whole, is not permitted unless authorised by Volkswagen AG. Volkswagen AG does not guarantee or accept any liability with respect to the correctness of information in this document. Copyright by Volkswagen AG.

satelettronica